MANDÍK

TPM 094/13
Version 2026-10-16

RPM-K

Circular constant airflow regulator

Technical Documentation
Installation, Commissioning, Operation, Maintenance and Service Manual

MANDÍK®
www.mandik.com

MANDÍK, a.s. • Dobříšská 550 • 267 24 Hostomice • Czech Republic • Tel.: +420 311 706 742 • E-Mail: mandik@mandik.cz

These technical specifications state a row of manufactured sizes and models of constant air volume controller (further only controller) RPM-K. It is valid for production, designing, ordering, delivery, assembly and operation.

I. CONTENT

II. GENERAL INFORMATION **3**

1. Description..... 3
2. Design..... 4
3. Dimensions, weights..... 4
4. Placement and Assembly..... 6

III. TECHNICAL DATA **7**

5. Basic parameters..... 7
6. Electrical components, Wiring Diagrams..... 8
7. Pressure loss..... 10
8. Noise data..... 11

IV. MATERIAL, FINISHING **20**

9. Material..... 20

V. INSPECTION, TESTING **20**

10. Inspection, testing..... 20

VI. TRANSPORTATION AND STORAGE **20**

11. Logistic terms..... 20

VII. ORDERING INFORMATION **21**

12. Ordering key..... 21

II. GENERAL INFORMATION

1. Description

Fig. 1 Controller RPM-K

1.1. Air flow regulators with constant flow (CAV) are designed for regulating of air supply or air exhaust in ventilation systems. They can be installed in a horizontal, vertical or inclined positions. To ensure proper operation, the regulator (CAV) must be installed with horizontal position of its blade´s axis. The aerodynamic forces acting on the regulator blade due to the flow are balanced by the control device, which is set according to the required flow.

Adjustment of required flow is simply performed by lever with a pointer and scale.

Mechanical controllers need not be connected to any external power source.

The controller consists of the casing of the controller with a control blade and control device. Control device is placed inside of box with scale for adjustment of required flow. Accuracy of the scale is ± 5 %.

1.2. Controller characteristics

● Nominal size	DN 80 ÷ DN 400
● Length	L = 450
● Tightness acc. to EN 1751	External casing leakage class ATC 3 (old marking “C“)
● Air flow volume	50 ÷ 4 500 m^3/h
● Accuracy	±15-20% for air velocities less than 4m/s ±10% for air velocities more than 4m/s Pollution, deformation of the damper body or non-steady air circulation in the all cross section of the damper can bring bigger inaccuracy.

1.3. Working conditions

The faultless functioning of the controllers is ensured under the following conditions::
a) maximum speed of air flow 10 m/s
b) maximum pressure in the duct 1000 Pa
c) the air circulation in the whole controller section must be secured as steady on whole surface

Controllers are designed for macroclimatic areas with mild climate according to EN 60 721-3-3.

Controllers are suitable for systems without abrasive, chemical and adhesive particles.

Temperature in the place of installation is permitted to range from 0°C to + 50°C.

2. Design

2.1. The controller consists of the casing of the controller with a control blade and control device. Sliding bearings of blade axis are stainless or bronze. Control device consist of spring and shock absorber. On the top of control device box is lever with a pointer and scale for adjustment of required flow.

2.2. Controllers can be alternatively equipped by actuating mechanism. It enable remote adjustment of required flow. In this case actuating mechanism don't control regulator damper. Actuating mechanism control setting of lever for adjustment of required flow. If is used actuating mechanism temperature range is from 0°C to + 50°C.

Tab. 2.1.1. Design

Design - type of control	Additional digits
Manually controlled	.01
Actuating mechanism 230V, open-close control	.45
Actuating mechanism 230V, open-close control, with limit switch	.46
Actuating mechanism 24V, open-close control	.55
Actuating mechanism 24V, open-close control, with limit switch	.56
Actuating mechanism 24V SR modulating control	.57

3. Dimensions, weights

3.1. Dimensions, weights

Tab. 3.1.1. Dimensions, weights

Size	⌀ D	Weigth [kg]								Actuating mechanism
		Design								
		spiro		spiro with actuating mechanism		with flange		with flange and actuating mechanism		
		without insulation	with insulation	without insulation	with insulation	without insulation	with insulation	without insulation	with insulation	
80	80	2,3	3,7	2,8	4,3	2,7	4,1	3,3	4,7	LM
100	100	2,5	3,9	3,1	4,5	2,9	4,3	3,5	4,9	LM
125	125	2,8	4,4	3,4	5,0	3,2	4,8	3,8	5,4	LM
160	160	3,2	5,1	3,8	5,7	4,0	5,8	4,6	6,5	LM
200	200	3,8	5,9	4,4	6,5	4,4	6,5	5,0	7,2	LM
250	250	4,5	7,0	5,4	7,6	5,1	7,7	5,8	8,3	LM
315	315	5,4	8,4	6,3	9,0	6,0	9,3	6,9	9,9	LM
400	400	6,7	10,3	8,9	11,2	7,6	12,5	9,8	13,4	NM

Fig. 2 Constant air volume regulator - spiro with rubber sealing

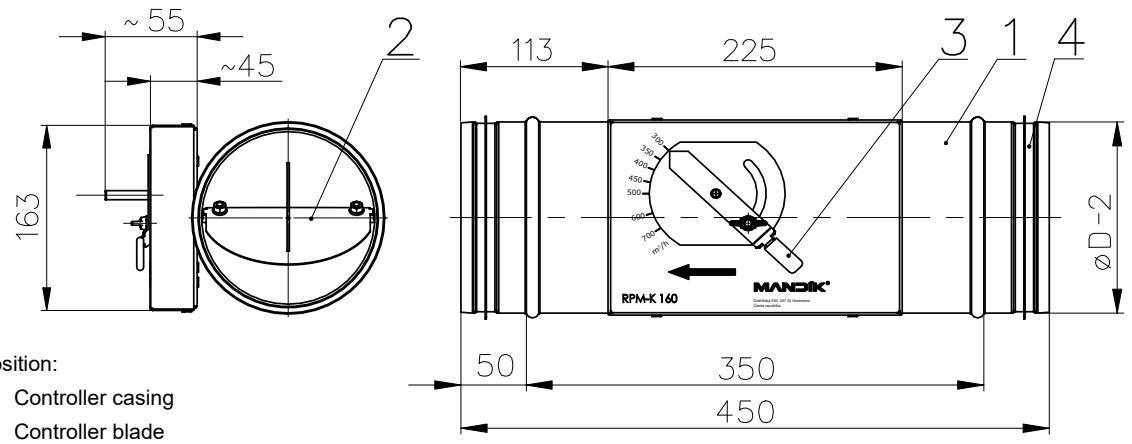

Position:
1 Controller casing
2 Controller blade
3 Lever
4 Rubber sealing

Fig. 3 Constant air volume regulator - with flanges

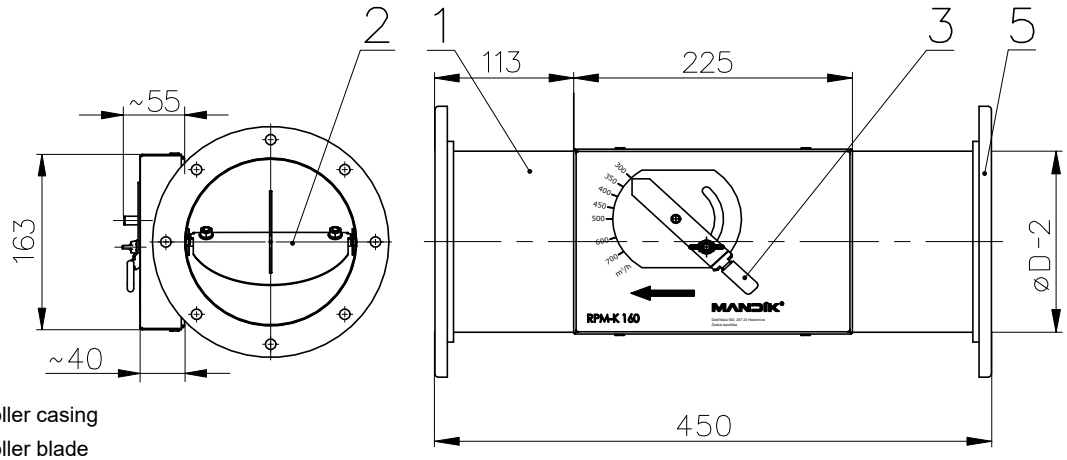

Position:
1 Controller casing
2 Controller blade
3 Lever
5 Flange

Fig. 4 Constant air volume regulator - with actuating mechanism

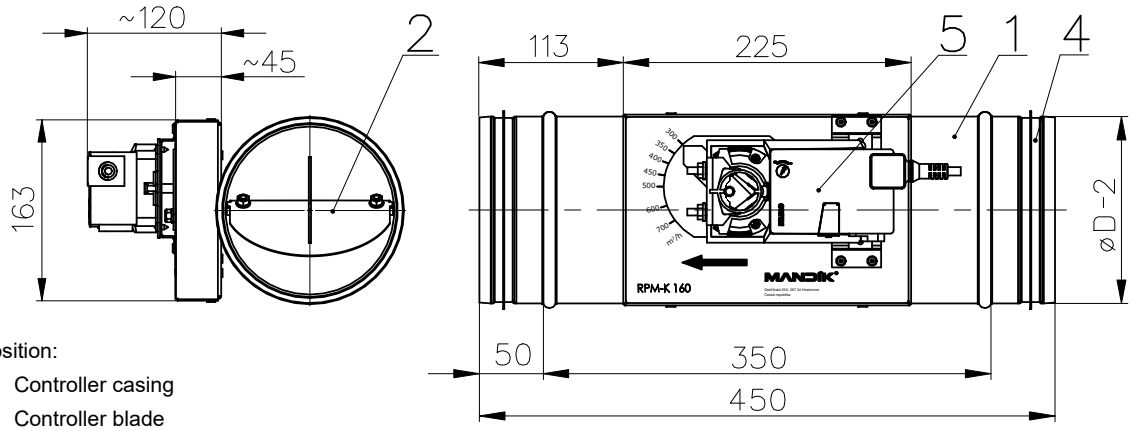

Position:
1 Controller casing
2 Controller blade
4 Rubber sealing
5 Actuating mechanism

Fig. 5 Constant air volume regulator - spiro with rubber sealing and insulation

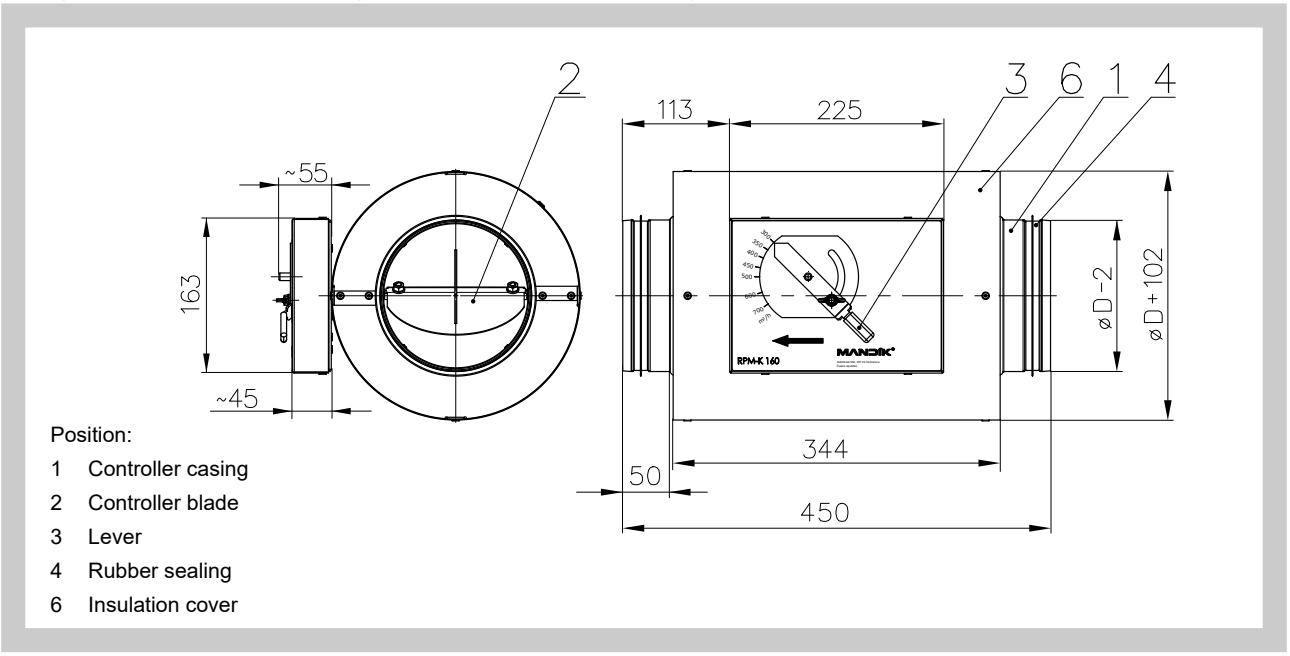

4. Placement and Assembly

4.1. Air flow regulators are designed for installation in ventilation ducts. The operating position is vertical, horizontal or inclined. To ensure proper operation, the regulator (CAV) must be installed with horizontal position of its blade´s axis.

Controller has to be installed depending of flow direction (it is labeled by arrow on the top of control device box).

For faultless functioning has to be the air circulation in the whole controller section must be secured as steady on whole surface. Distance between controller and duct elements (bends, double branch joints etc.) has to be minimal 2xØD.

4.2. The controller body should not be deformed in the course of installation.

Fig. 6 Recommended distance from double branch joint

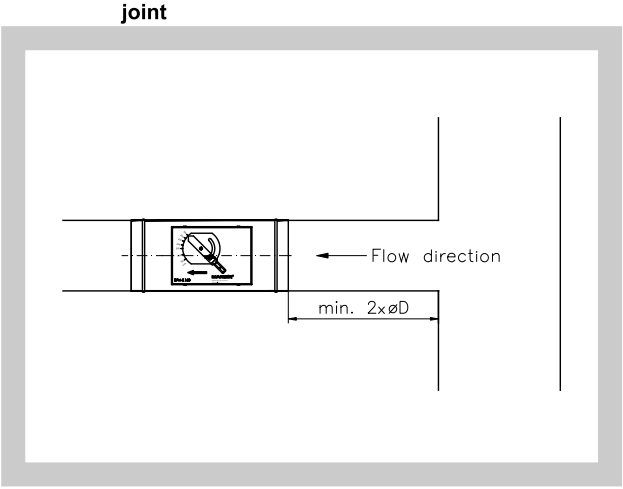

Fig. 7 Recommended distance from bend

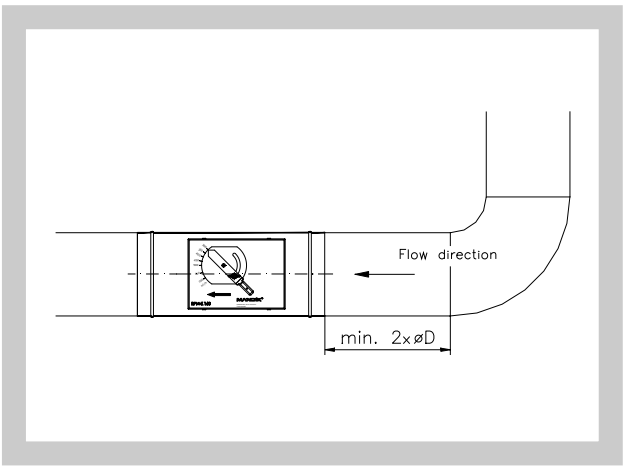

III. TECHNICAL DATA

5. Basic parameters

5.1. Air volume

Tab. 5.1.1. Air volume

Size	Air volume [m³/h]	
	Minimum	Maximum
80	50	200
100	80	300
125	125	500
160	200	900
200	300	1300
250	500	2000
315	850	2800
400	1200	4500

5.2. Controller parameters

Tab. 5.2.1. Controller parameters

Size	Air volume [m³/h]	Max. inaccuracy [%]	Min. press. difference [Pa]	Size	Air volume [m³/h]	Max. inaccuracy [%]	Min. press. difference [Pa]
80	50	20	100	**200**	300	18	50
	100	15	100		500	15	60
	150	10	100		900	10	70
	200	10	120		1300	10	80
100	80	18	50	**250**	500	15	50
	150	15	60		800	12	70
	250	10	80		1200	10	80
	300	10	90		2000	10	90
125	125	18	50	**315**	800	15	50
	200	15	60		1200	10	70
	350	10	70		2000	10	80
	500	10	90		2800	10	90
160	200	18	50	**400**	1200	15	50
	400	15	70		2000	10	70
	700	10	80		3000	10	80
	900	10	90		4500	10	90

6. Electrical components, wiring diagrams

6.1. Parameters of actuating mechanisms

Tab. 6.1.1. Parameters of actuating mechanisms

Actuating mechanism	Position indication	Torque	Weight [kg]	Nominal voltage	Power consumption		
					In operation	At rest	Dimensioning
Belimo LM 230A	NO	5 Nm	0,5	AC 100 ... 240 V, 50/60 Hz	1,5 W	0,4 W	4 VA
Belimo LM 230A-S	YES	5 Nm	0,6	AC 100 ... 240 V, 50/60 Hz	1,5 W	0,4 W	4 VA
Belimo NM 230A	NO	10 Nm	0,75	AC 100 ... 240 V, 50/60 Hz	2,5 W	0,6 W	5,5 VA
Belimo NM 230A-S	YES	10 Nm	0,85	AC 100 ... 240 V, 50/60 Hz	2,5 W	0,6 W	6 VA
Belimo LM 24A	NO	5 Nm	0,5	AC 24 V, 50/60 Hz; DC 24 V	1 W	0,2 W	2 VA
Belimo LM 24A-S	YES	5 Nm	0,6	AC 24 V, 50/60 Hz; DC 24 V	1 W	0,2 W	2 VA
Belimo NM 24A	NO	10 Nm	0,75	AC 24 V, 50/60 Hz; DC 24 V	1,5 W	0,2 W	3,5 VA
Belimo NM 24A-S	YES	10 Nm	0,85	AC 24 V, 50/60 Hz; DC 24 V	1,5 W	0,2 W	4 VA
Belimo LM 24A-SR	YES	5 Nm	0,85	AC 24 V, 50/60 Hz; DC 24 V	1,0 W	0,4 W	2 VA
Belimo NM 24A-SR	YES	10 Nm	0,80	AC 24 V, 50/60 Hz; DC 24 V	2,0 W	0,4 W	4 VA

6.2. Wiring diagrams

Fig. 8 Wiring diagram - actuating mechanism Belimo LM(NM) 230A

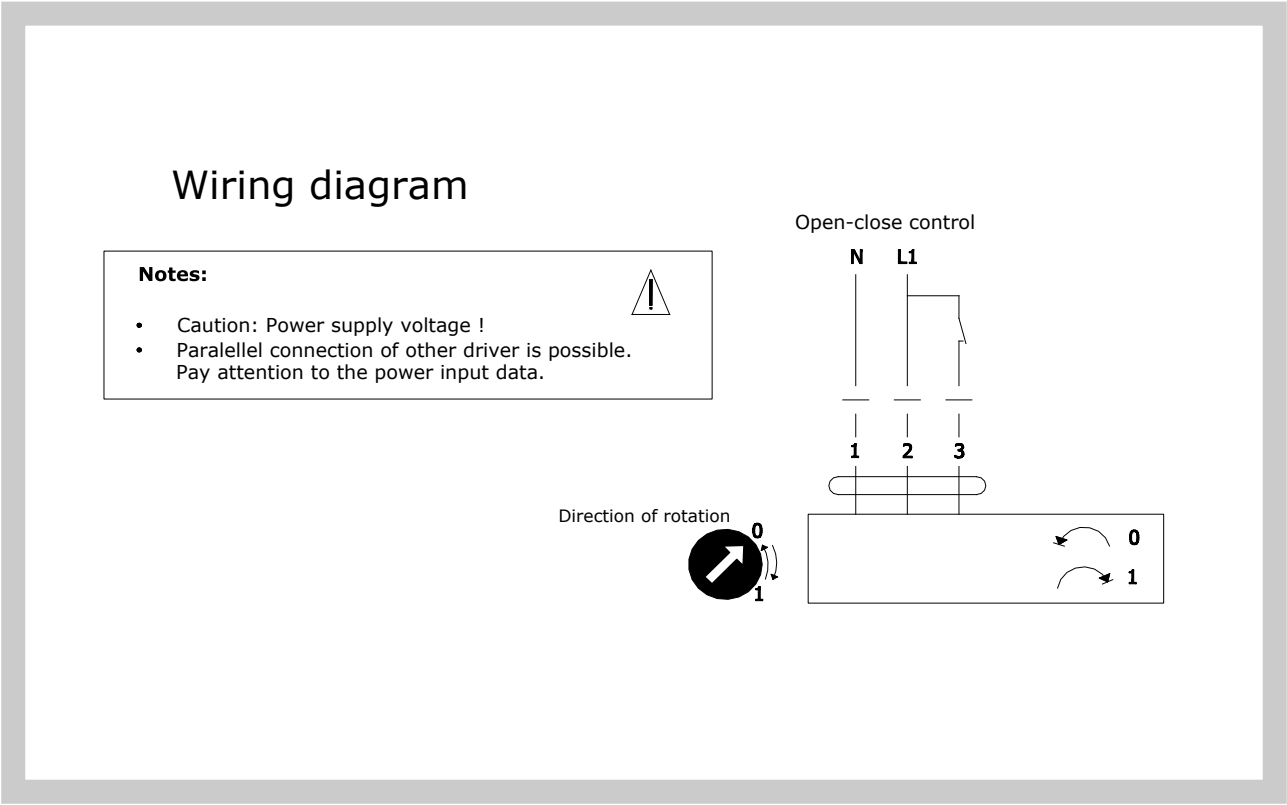

Fig. 9 Wiring diagram - actuating mechanism Belimo LM(NM) 24A

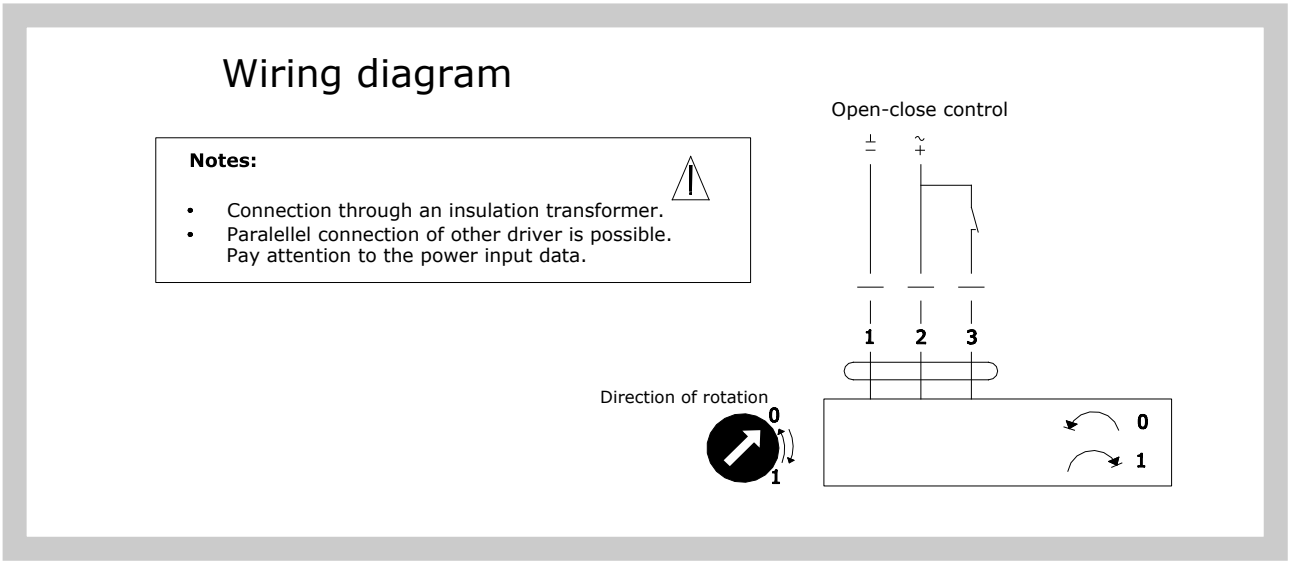

Fig. 10 Wiring diagram - actuating mechanism Belimo LM(NM) 24A-SR

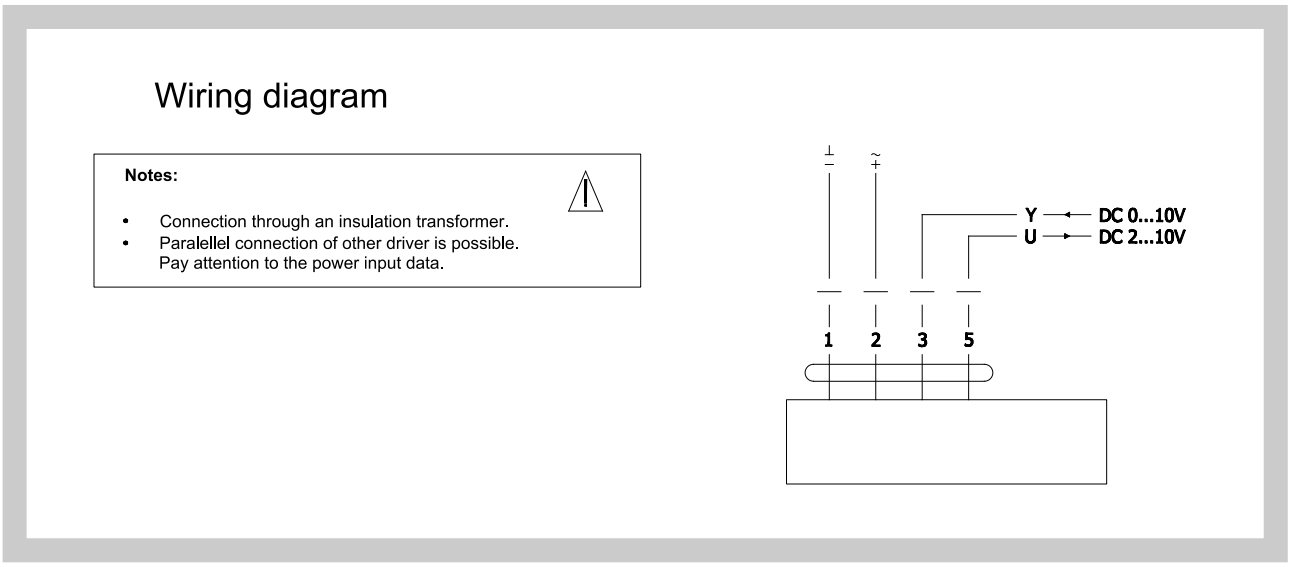

Fig. 11 Wiring diagram - actuating mechanism Belimo LM(NM) 230A-S

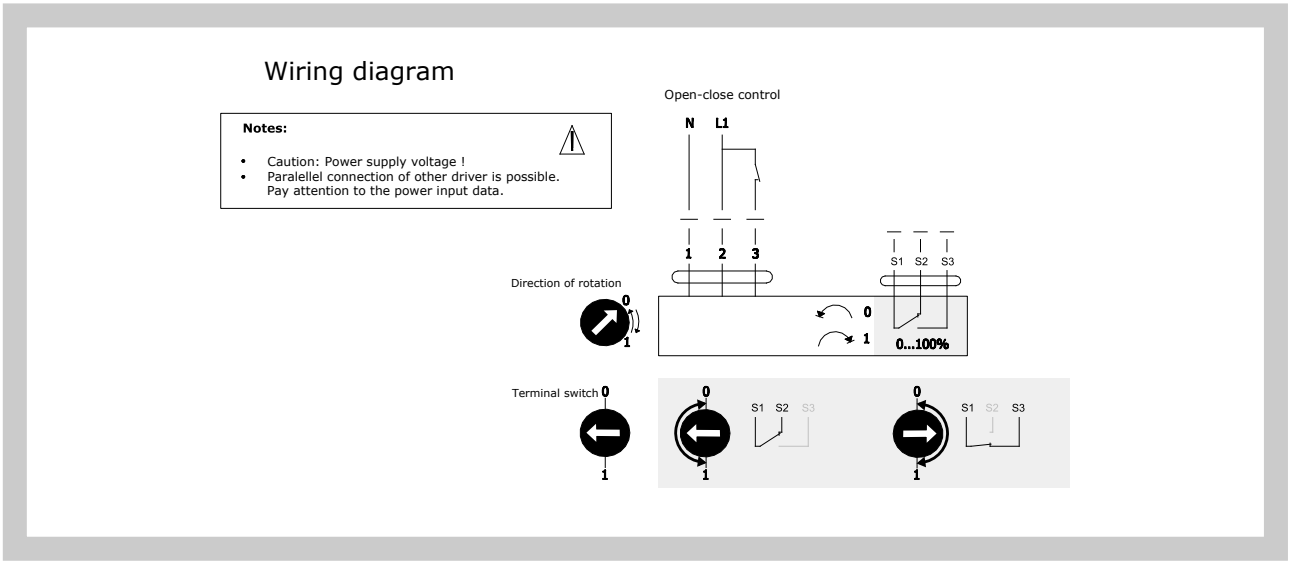

Fig. 12 Wiring diagram - actuating mechanism Belimo LM(NM) 24A-S

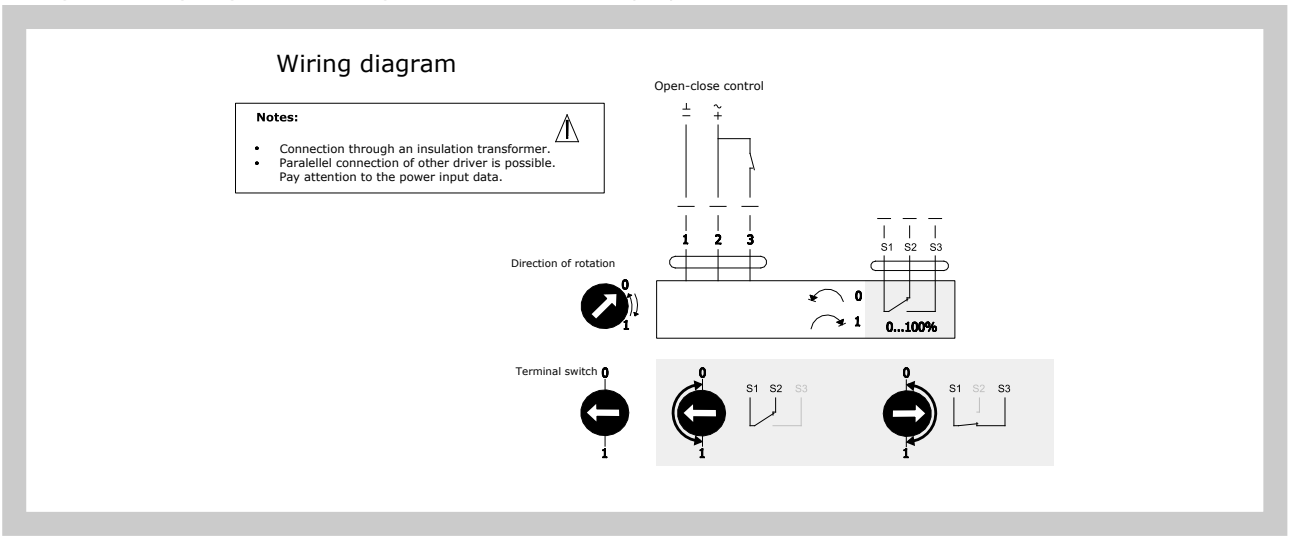

7. Pressure loss

7.1. Pressure losses

Diagram 7.1.1. Pressure losses (the values are valid when the damper of the controller is completely open)

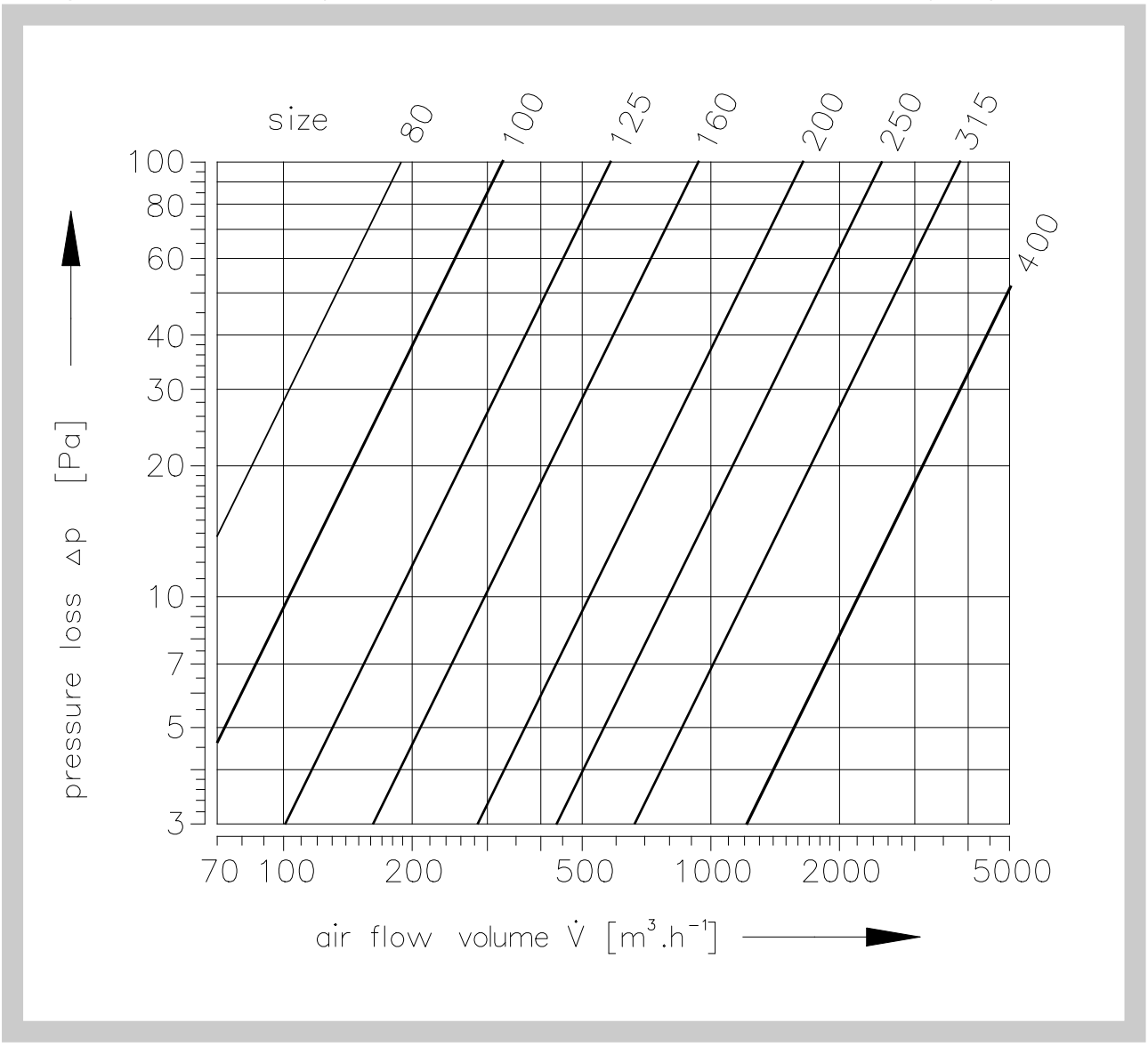

8. Noise data

8.1. Air-regenerated Noise

The noise arising due to the flow of air volume controller is listed in the following tables Tab. 8.1.1.

$\mathring{V}$ [m³.h⁻¹] - air flow volume

Δp_{st} [Pa] - pressure differential

L_W [dB/Okt.] - level of acoustic power in the octave band

L_{WA} [dB(A)] - total level of acoustic power corrected by filter A

f_m [Hz] - mean frequencies in the octave bands

Tab. 8.1.1. Sound power level inside the pipeline at pressure difference 50 Pa

Δp_{st} = 50 Pa										
Size [mm]	**$\mathring{V}$ [m³/h]**	**L_W [dB/Okt]**								**L_{WA} [dB(A)]**
		f_m [Hz]								
		63	**125**	**250**	**500**	**1000**	**2000**	**4000**	**8000**	
80	50	48	38	32	32	35	31	23	<15	38
	100	54	45	41	38	39	34	28	18	43
	150	60	52	48	44	43	39	35	23	48
	200	66	58	54	49	46	42	39	28	52
100	80	49	39	33	33	36	32	24	<15	39
	155	56	47	43	40	41	37	30	20	45
	225	62	54	50	46	45	41	37	26	50
	300	67	59	56	51	48	44	41	30	54
125	125	50	40	34	34	37	33	26	<15	40
	250	58	49	46	43	44	40	33	22	47
	380	64	56	52	48	47	44	40	28	52
	500	70	62	58	53	50	46	43	32	56
160	200	54	44	38	38	41	37	29	18	44
	430	59	50	46	45	44	40	34	23	48
	650	65	57	53	49	48	44	40	28	53
	900	68	61	57	52	49	45	42	31	55
200	300	53	43	37	37	40	36	29	17	43
	630	60	51	47	44	45	41	35	24	49
	960	66	58	54	50	49	45	41	29	54
	1300	72	64	60	55	52	48	45	34	58
250	500	54	44	38	38	41	37	29	18	44
	1000	60	51	47	44	45	41	34	24	49
	1500	66	58	54	50	49	46	42	30	54
	2000	72	64	60	55	52	48	45	34	58
315	800	55	45	39	39	42	38	30	19	45
	1500	62	53	49	46	47	43	36	25	51
	2150	66	58	54	50	49	45	41	30	54
	2800	74	66	62	57	54	50	47	36	60
400	1200	38	28	22	22	25	21	<15	<15	28
	2300	41	32	28	25	26	22	15	<15	30
	3400	44	36	32	28	27	23	19	<15	32
	4500	47	39	35	30	27	23	20	<15	33

Tab. 8.1.2. Sound power level inside the pipeline at pressure difference 100 Pa

Δp_{st} = 100 Pa										
Size [mm]	$\dot{V}$ [m³.h⁻¹]	L_W [dB/Okt]								L_{WA} [dB(A)]
		f_m [Hz]								
		63	125	250	500	1000	2000	4000	8000	
80	50	52	42	36	36	39	35	27	15	42
	100	58	49	45	42	43	39	32	21	47
	150	64	56	52	48	47	43	39	27	52
	200	70	62	58	53	50	46	43	32	56
100	80	53	43	37	37	40	36	28	16	43
	155	60	51	47	44	45	41	34	23	49
	225	66	58	54	50	49	45	41	29	54
	300	72	64	60	55	52	48	45	34	58
125	125	55	45	39	39	42	38	30	18	45
	250	63	54	50	47	48	44	37	26	52
	380	69	61	57	53	52	48	44	32	57
	500	74	66	62	57	55	50	47	36	61
160	200	58	48	42	42	45	41	33	21	48
	430	64	55	51	48	49	45	38	27	53
	650	69	61	57	53	52	48	44	32	57
	900	74	66	62	57	54	50	47	36	60
200	300	58	48	42	42	45	41	33	21	48
	630	65	56	52	49	50	46	39	28	54
	960	70	62	58	54	53	49	45	33	58
	1300	76	68	64	59	56	52	49	38	62
250	500	59	49	43	43	46	42	34	22	49
	1000	65	56	52	49	50	46	39	28	54
	1500	71	63	59	55	54	50	46	34	59
	2000	76	68	64	59	56	52	49	38	62
315	800	60	50	44	44	47	43	35	23	50
	1500	66	57	53	50	51	47	40	29	55
	2150	71	63	59	55	54	50	46	34	59
	2800	78	70	65	59	57	53	51	40	63
400	1200	67	58	54	51	52	48	41	30	56
	2300	70	62	58	54	55	51	45	33	59
	3400	73	65	60	57	58	53	49	36	62
	4500	76	68	64	60	59	55	51	39	64

Tab. 8.1.3. Sound power level inside the pipeline at pressure difference 250 Pa

Δp_{st} = 250 Pa										
Size [mm]	$\dot{V}$ [m³.h⁻¹]	L_W [dB/Okt]								L_{WA} [dB(A)]
		f_m [Hz]								
		63	125	250	500	1000	2000	4000	8000	
80	50	58	48	42	42	45	41	33	21	48
	100	64	55	51	48	49	45	38	27	53
	150	70	62	58	54	53	49	45	33	58
	200	76	68	64	59	56	52	49	38	62
100	80	59	49	43	43	46	42	34	22	49
	155	65	56	52	49	50	46	39	28	54
	225	73	65	61	56	55	52	48	36	60
	300	77	69	65	60	57	53	50	39	63
125	125	64	54	48	47	50	47	39	27	53
	250	69	60	56	53	54	50	43	32	58
	380	75	67	63	59	58	54	50	38	63
	500	81	73	69	64	61	58	55	44	67
160	200	66	56	50	50	53	49	41	29	56
	430	72	63	59	56	57	53	46	35	61
	650	77	69	65	61	60	56	52	40	65
	900	79	73	69	64	63	55	53	42	68
200	300	67	57	51	51	54	50	42	30	57
	630	72	63	59	56	57	53	46	35	61
	960	77	69	65	61	60	56	52	40	65
	1300	81	73	69	64	61	57	54	43	67
250	500	68	58	52	52	55	51	43	31	58
	1000	72	63	59	58	58	53	46	35	62
	1500	77	69	65	62	61	57	52	40	66
	2000	82	74	70	65	63	58	55	44	69
315	800	68	58	52	52	55	51	43	31	58
	1500	74	65	61	58	59	55	48	37	63
	2150	78	70	66	62	61	57	53	41	66
	2800	82	74	70	65	63	58	55	44	69
400	1200	73	64	58	58	60	57	50	37	64
	2300	75	67	63	61	62	58	50	38	66
	3400	77	69	66	63	65	59	51	41	68
	4500	81	74	70	66	65	61	56	44	70

Tab. 8.1.4. Sound power level inside the pipeline at pressure difference 500 Pa

Δp_{st} = 500 Pa										
Size [mm]	$\dot{V}$ [m³.h⁻¹]	L_W [dB/Okt]								L_{WA} [dB(A)]
		f_m [Hz]								
		63	125	250	500	1000	2000	4000	8000	
80	50	64	54	48	48	51	47	39	27	54
	100	70	61	57	54	55	51	44	33	59
	150	76	68	64	60	59	55	51	39	64
	200	82	74	70	65	62	58	55	44	68
100	80	65	55	49	49	52	48	40	28	55
	155	71	62	58	55	56	52	45	34	60
	225	78	70	66	62	61	57	53	41	66
	300	83	75	71	66	63	60	57	46	69
125	125	71	61	55	54	57	54	46	34	60
	250	76	67	63	60	61	57	50	39	65
	380	82	74	70	66	65	61	57	45	70
	500	87	79	75	70	67	63	60	49	73
160	200	72	62	56	56	59	55	47	35	62
	430	79	70	66	63	63	60	53	42	67
	650	83	75	71	67	66	62	58	46	71
	900	88	80	76	71	68	64	61	50	74
200	300	74	64	58	58	61	57	49	37	64
	630	79	70	66	63	64	60	53	42	68
	960	83	75	71	67	66	62	58	46	71
	1300	87	79	75	70	67	63	60	49	73
250	500	76	66	60	60	63	59	51	39	66
	1000	80	71	67	64	65	61	54	43	69
	1500	84	76	72	68	67	63	59	47	72
	2000	88	80	76	71	68	64	61	50	74
315	800	76	66	60	60	63	59	51	39	66
	1500	80	71	67	66	66	61	54	43	70
	2150	85	77	73	68	67	64	60	48	72
	2800	88	80	76	71	68	64	61	50	74
400	1200	79	70	65	66	68	62	53	42	71
	2300	83	74	70	68	69	65	58	47	73
	3400	86	76	73	70	71	66	59	48	75
	4500	88	81	77	73	72	68	64	51	77

Diagram No. 1 **Sound power level L_{WA} [dB(A)] inside the pipeline DN80**

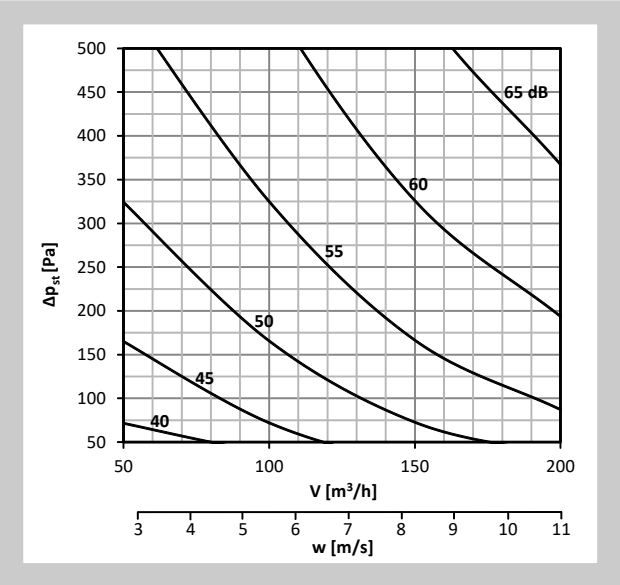

Diagram No. 2 **Sound power level L_{WA} [dB(A)] inside the pipeline DN100**

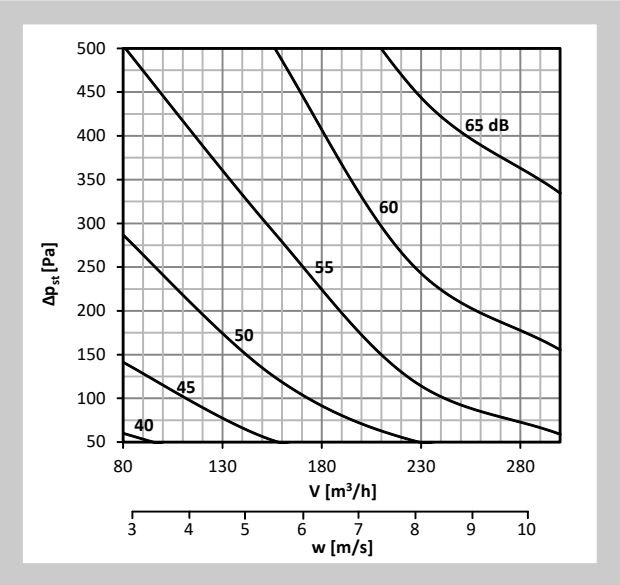

Diagram No. 3 **Sound power level L_{WA} [dB(A)] inside the pipeline DN125**

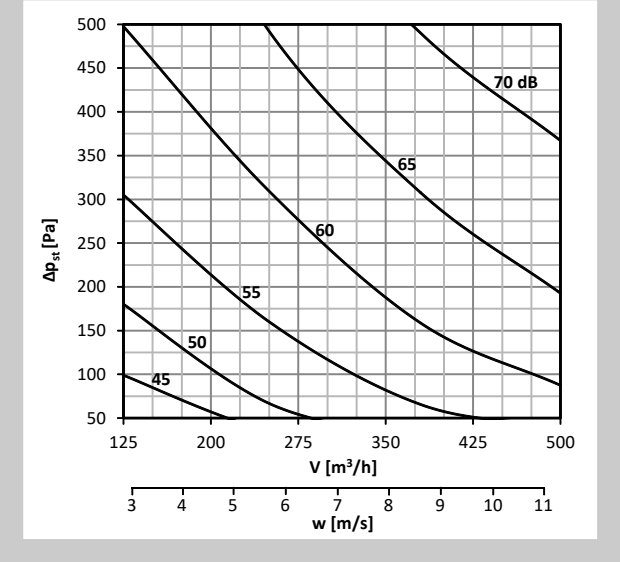

Diagram No. 4 **Sound power level L_{WA} [dB(A)] inside the pipeline DN160**

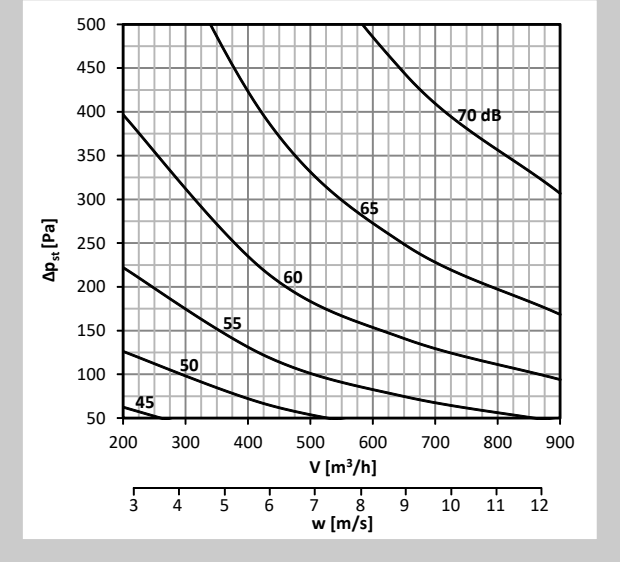

Diagram No. 5 **Sound power level L_{WA} [dB(A)] inside the pipeline DN200**

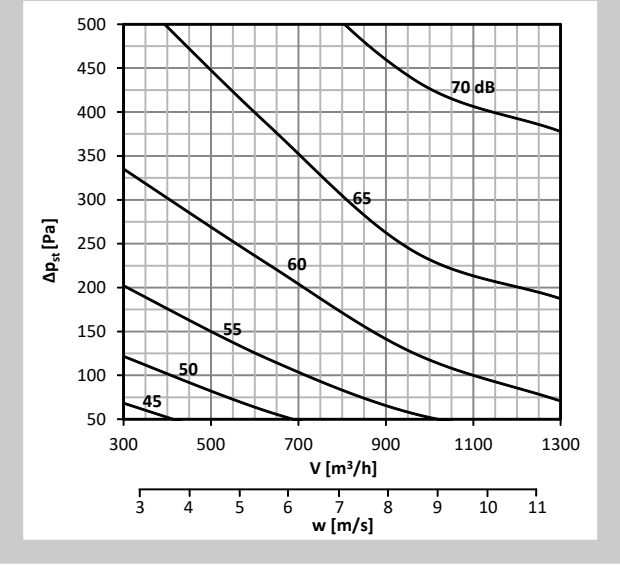

Diagram No. 6 **Sound power level L_{WA} [dB(A)] inside the pipeline DN250**

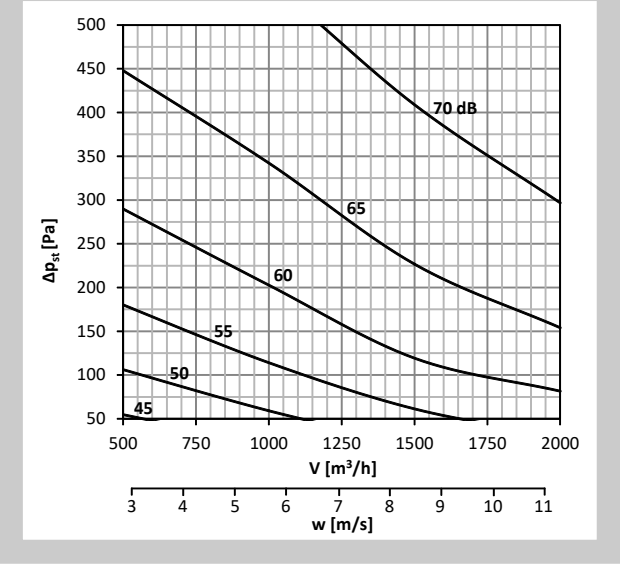

Diagram No. 7 Sound power level L_{WA} [dB(A)] inside the pipeline DN315

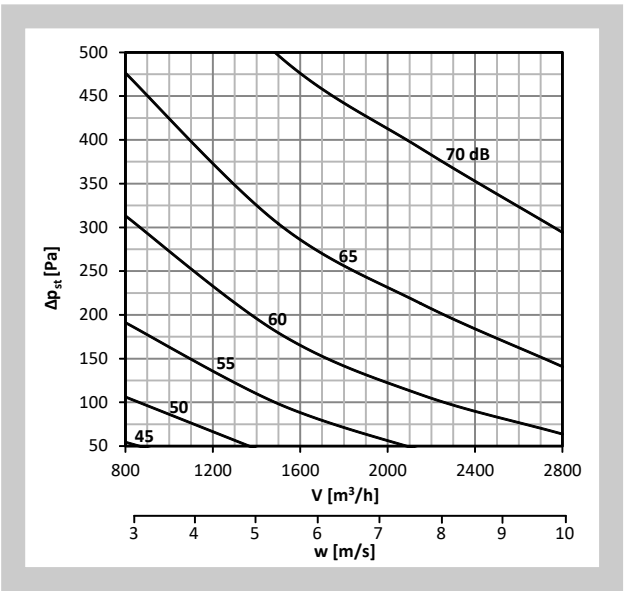

Diagram No. 8 Sound power level L_{WA} [dB(A)] inside the pipeline DN400

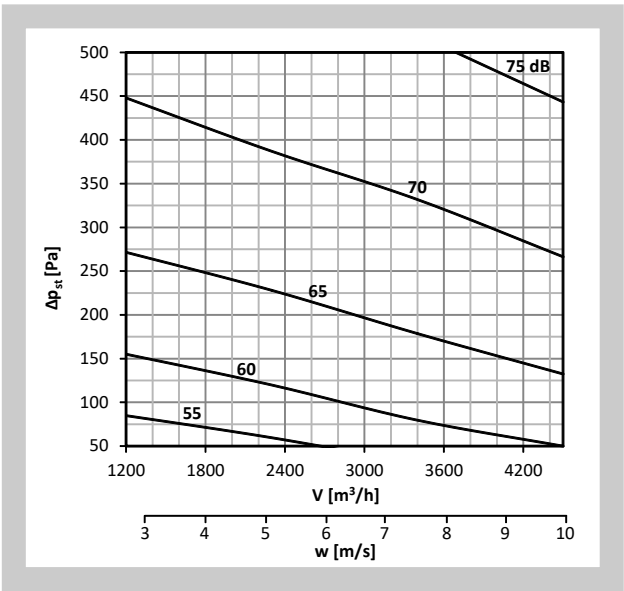

8.2. Radiated noise - without insulation

The radiated noise of air volume controller is listed in Tab. 8.2.1.

$\dot{V}$	[m³.h⁻¹]	- air flow volume
Δp_{st}	[Pa]	- pressure differential
L_{WA}	[dB(A)]	- total level of acoustic power corrected by filter A

Tab. 8.2.1. Sound power level radiated outside the pipeline - without insulation

Size [mm]	$\dot{V}$ [m³.h⁻¹]	L_{WA} [dB(A)]	L_{WA} [dB(A)]	L_{WA} [dB(A)]	L_{WA} [dB(A)]
		Δpst = 50 Pa	Δpst = 100 Pa	Δpst = 250 Pa	Δpst = 500 Pa
80	50	<15	20	30	39
	100	22	27	36	44
	150	30	34	42	48
	200	37	41	47	52
100	80	16	22	32	39
	155	25	30	38	45
	225	32	37	44	50
	300	39	43	49	54
125	125	19	24	34	42
	250	27	32	40	47
	380	32	37	44	50
	500	37	41	47	53

Size [mm]	V̊ [m³.h⁻¹]	L_{WA} [dB(A)]	L_{WA} [dB(A)]	L_{WA} [dB(A)]	L_{WA} [dB(A)]
		∆pst = 50 Pa	∆pst = 100 Pa	∆pst = 250 Pa	∆pst = 500 Pa
160	200	32	36	43	49
	430	36	40	47	53
	650	40	45	51	57
	900	44	48	54	60
200	300	32	36	44	50
	630	36	41	48	54
	960	42	46	52	57
	1300	46	50	55	60
250	500	31	36	46	53
	1000	36	41	50	57
	1500	42	46	53	59
	2000	45	49	56	61
315	800	33	38	47	53
	1500	39	44	52	57
	2150	44	49	56	61
	2800	48	53	59	64
400	1200	37	42	50	57
	2300	42	47	54	60
	3400	47	51	57	62
	4500	51	55	60	64

Diagram No. 9 **Sound power level L_{WA} [dB(A)] radiated outside the pipeline DN80, without insulation**

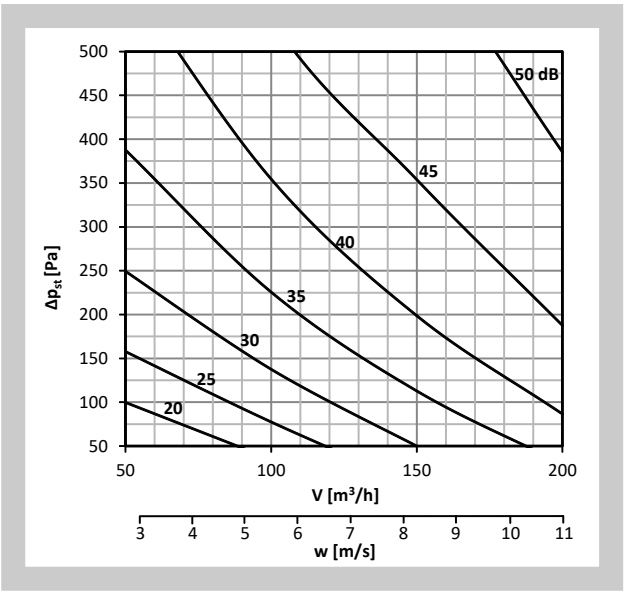

Diagram No. 10 **Sound power level L_{WA} [dB(A)] radiated outside the pipeline DN100, without insulation**

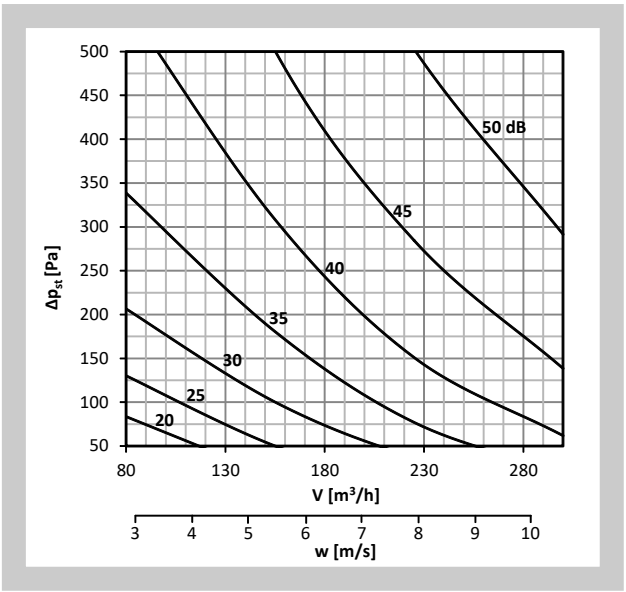

Diagram No. 11 **Sound power level L_{WA} [dB(A)] radiated outside the pipeline DN125, without insulation**

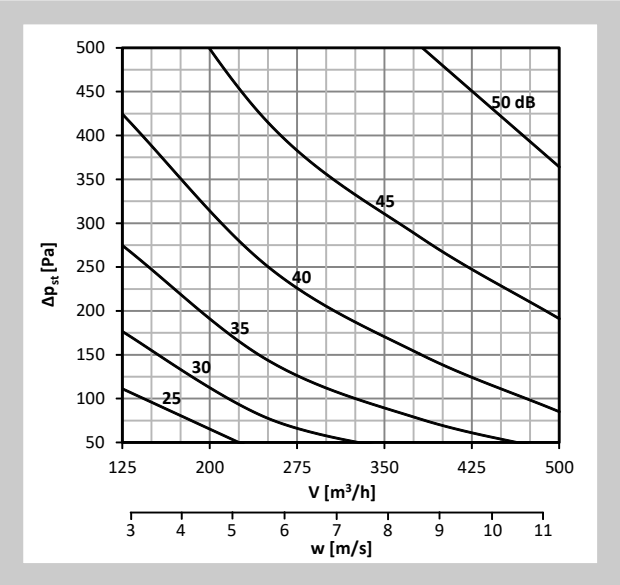

Diagram No. 12 **Sound power level L_{WA} [dB(A)] radiated outside the pipeline DN160, without insulation**

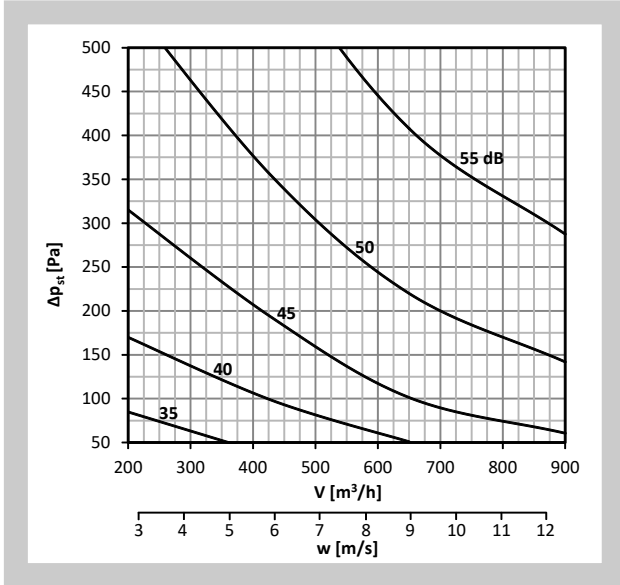

Diagram No. 13 **Sound power level L_{WA} [dB(A)] radiated outside the pipeline DN200, without insulation**

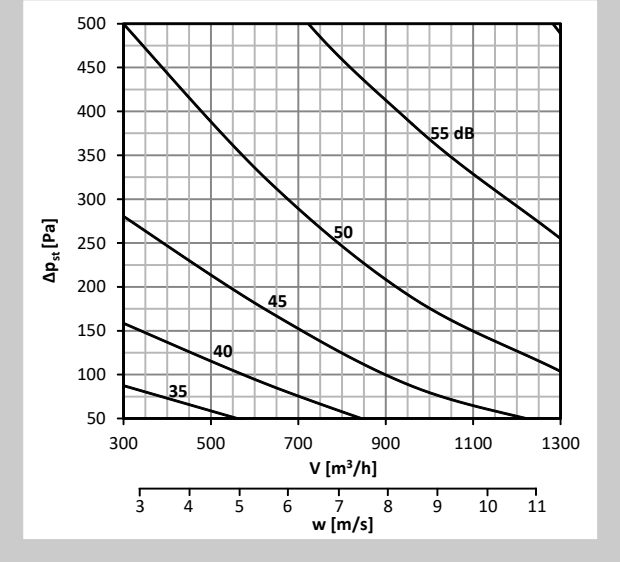

Diagram No. 14 **Sound power level L_{WA} [dB(A)] radiated outside the pipeline DN250, without insulation**

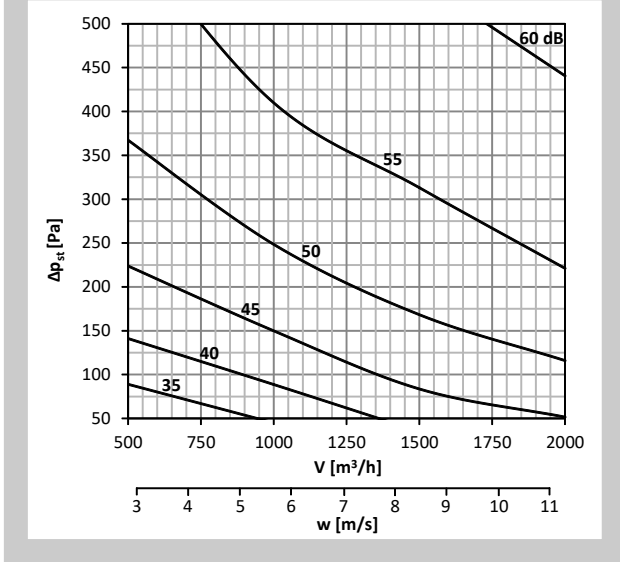

Diagram No. 15 **Sound power level L_{WA} [dB(A)] radiated outside the pipeline DN315, without insulation**

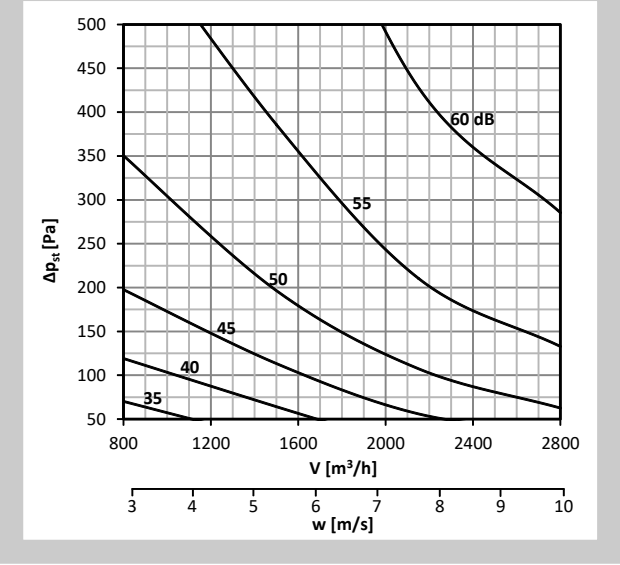

Diagram No. 16 **Sound power level L_{WA} [dB(A)] radiated outside the pipeline DN400, without insulation**

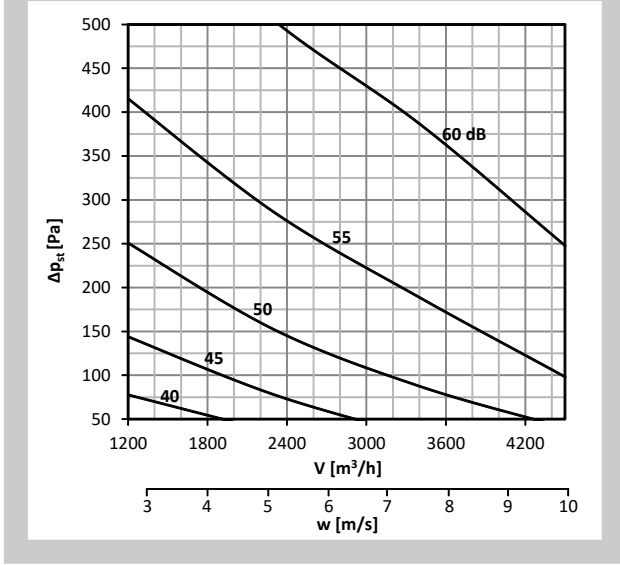

8.3. Radiated noise - with insulation

The radiated noise of air volume controller is listed in Tab. 8.3.1.

$\dot{V}$ [m³.h⁻¹] - air flow volume
Δp_{st} [Pa] - pressure differential
L_{WA} [dB(A)] - total level of acoustic power corrected by filter A

Tab. 8.3.1. Sound power level radiated outside the pipeline - with insulation

Size [mm]	$\dot{V}$ [m³.h⁻¹]	L_{WA} [dB(A)]	L_{WA} [dB(A)]	L_{WA} [dB(A)]	L_{WA} [dB(A)]
		Δpst = 50 Pa	Δpst = 100 Pa	Δpst = 250 Pa	Δpst = 500 Pa
80	50	<15	<15	<15	<15
	100	<15	<15	<15	<15
	150	<15	<15	15	20
	200	<15	<15	17	22
100	80	<15	<15	<15	<15
	155	<15	<15	<15	15
	225	<15	<15	19	22
	300	<15	<15	20	25
125	125	<15	<15	<15	15
	250	<15	<15	15	20
	380	<15	17	24	28
	500	18	21	28	30
160	200	<15	<15	19	22
	430	<15	18	26	30
	650	20	23	32	35
	900	21	25	31	37
200	300	<15	15	20	22
	630	16	19	25	30
	960	22	26	34	38
	1300	25	29	36	40
250	500	<15	15	23	27
	1000	16	20	28	33
	1500	24	28	36	42
	2000	27	31	39	44
315	800	<15	16	22	27
	1500	18	22	28	34
	2150	25	29	35	41
	2800	29	33	38	45
400	1200	19	22	28	32
	2300	24	27	33	37
	3400	30	33	39	43
	4500	33	36	42	46

IV. MATERIAL, FINISHING

9. Material

9.1. Controller casings and control device parts are made of galvanized plate. Regulator blade is made of aluminium plate. Damper axis, bearings and spring are made of stainless steel.

The controller is delivered without further surface treatment.

9.2. According to the customer's requirements, damper can be made of stainless material.

Specifications for stainless-steel models – classification of stainless steel:

- Class A2 – Food-grade stainless steel (AISI 304 – ČSN 17240)

Most metal components of the damper except for the servo drive are made from said stainless steel.

The following components, including the fasteners, are made from AISI304 stainless steel at all times:

1) Damper body and all components permanently attached
2) Leaf axis + leaf mounting bolts inside the controller
3) Control panels (upper, lower)
4) Internal mechanical controls – holder of tensioning pin, pin safety, levers, pins
5) Control lever including fasteners

Air volume control is manufactured from sheet aluminium.

The air volume control damper has an aluminium shell.

The springs in the control mechanism are stainless steel AISI301 – EN10270-3

Plastic components, sealants, servo drives, and end switches are identical for all material variants of the dampers.

Any other requirements for the design shall be considered atypical and shall be addressed on an individual basis.

V. INSPECTION, TESTING

10. Inspection, testing

10.1. The appliance is constructed and preset by the manufacturer, its operation is dependent on proper installation and adjustment.

10.2. All devices are tested terms of safety and operability after production.

VI. TRANSPORTATION AND STORAGE

11. Logistic terms

11.1. Controllers are transported by box freight vehicles without direct weather impact, there must not occur any sharp shocks and ambient temperature must not exceed +40°C. Controllers must be protected against mechanic damages when transported and manipulated. During transportation, the controller blade must be in the "CLOSED" position.

11.2. Dampers are stored indoor in environment without any aggressive vapours, gases or dust. Indoor temperature must be in the range from -5°C to +40°C and maximum relative humidity 80%. Dampers must be protected against mechanic damages when transported and manipulated.

VII. ORDERING INFORMATION

12. Ordering key

1	2	3	4		5	6
RPM-K	DN 125	.57	RS	-	A2	I

EXAMPLE:
RPM-K DN 125 .57 RS-A2 I
Circular constant airflow regulator RPM-K, dimension DN 125 mm, with actuator controlled 24V SR modulating control, straight connection to circular duct, stainless steel material variant, with insulation.

1| Regulator type - RPM-K

2| Regulator dimensions øD → see page 4

3| Regulator design

.01	Manual control
.45	Actuator controlled 230V, open-close control
.46	Actuator controlled 230V, open-close control, with limit switch
.55	Actuator controlled 24V, open-close control
.56	Actuator controlled 24V, open-close control, with limit switch
.57	Actuator controlled 24V SR modulating control

4|Duct connection

RS	Straight connection to circular duct
RF	Flanged connection to circular duct

5| Material and other design options

ZN	Galvanized
A2	Stainless steel 1.4301 (AISI 304)
A4	Stainless steel 1.4404 (AISI 316L)

6| Insulation

	Without insulation
I	With insulation

The producer reserves the right for innovations of the product.
For actual product information see www.mandik.com

MANDÍK®

www.mandik.com

MANDÍK, a.s. • Dobříšská 550 • 267 24 Hostomice • Czech Republic • Tel.: +420 311 706 742 • E-Mail: mandik@mandik.cz