MANDÍK

TPM 109/15
Version 2026-10-14

MSD (MSD-W)

Multi compartment smoke control damper

Technical Documentation
Installation, Commissioning, Operation, Maintenance and Service Manual

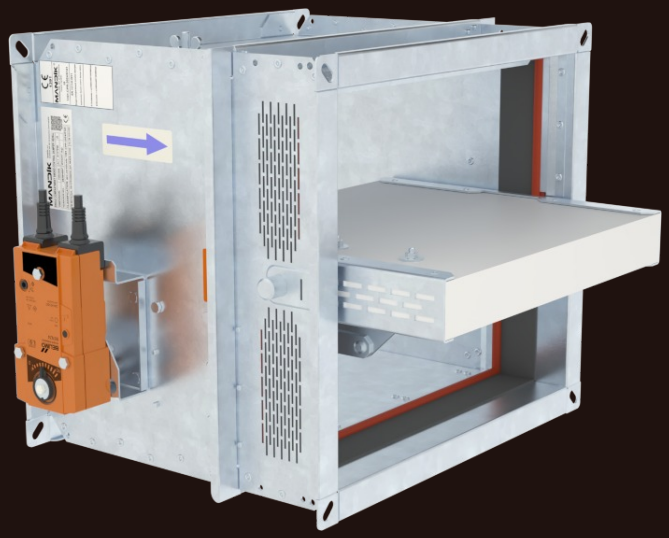

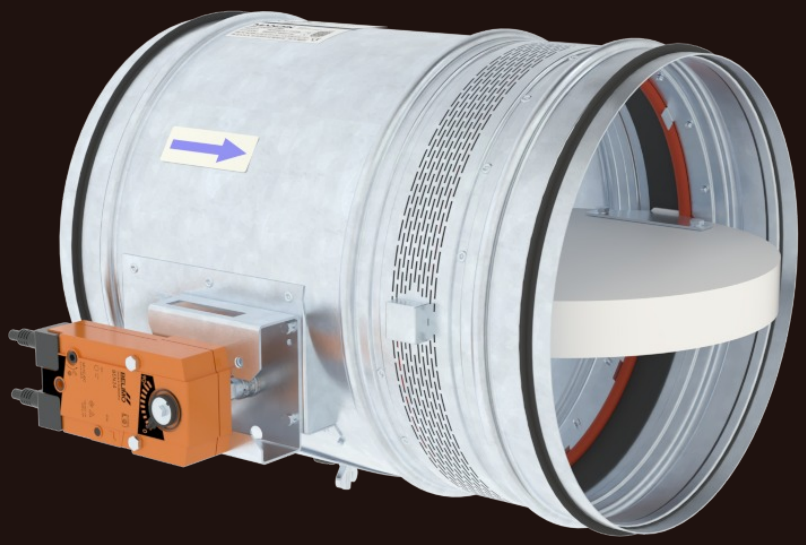

CE
1391

CCPi
ASSESSED PRODUCT INFORMATION
015800192/1227
Smoke Control Dampers

MANDÍK®
www.mandik.com

MANDÍK, a.s. • Dobříšská 550 • 267 24 Hostomice • Czech Republic • Tel.: +420 311 706 742 • E-Mail: mandik@mandik.cz

These technical specifications state a row of manufactured sizes, main dimensions, design and range of use of multi compartment smoke control dampers MSD. It is valid for production, design, ordering, delivery, storage, assembly, operation, maintenance and serviceability checks.

CONTENT

I. GENERAL....3
Description....3
II. DESIGN....5
Design with actuating mechanism....5
Design with electric actuating mechanism with emergency function and electromagnet....10
III. DIMENSIONS....14
Technical parameters....18
For rectangular dampers....18
For circular dampers....28
IV. INSTALLATION....29
Placement and installation....29
Statement of installations....32
In solid wall construction....33
In gypsum wall construction....38
In solid ceiling construction....43
Installation damper into/onto smoke extraction ducts....48
V. SUSPENSION SYSTEMS....50
Example of duct connection....52
VI. TECHNICAL DATA....53
Pressure loss....53
Noise data....55
VII. MATERIAL, FINISHING....56
VIII. TRANSPORTATION, STORAGE AND WARRANTY....57
Logistic terms....57
Warranty....57
IX. ASSEMBLY, ATTENDANCE AND MAINTENANCE....58
Electrical connection of the actuator in protection box....60
Entry into service and revisions....61
X. ORDERING INFORMATIONS....62
Ordering key MSD....62
Rectangular damper MSD....62
Circular damper MSD....62
Ordering key MSD-W....63
Rectangular damper MSD-W....63
Circular damper MSD-W....63
Data label....64

I. GENERAL

Description

Smoke control dampers – MULTI are closures installed in ductwork of smoke extraction systems. In the event of fire, the Smoke and Heat Exhaust Ventilation Systems system opens the dampers in the affected section, thereby allowing the exhaust fans to remove combustion products and heat from the endangered areas.

The damper blade is controlled by electrical actuating mechanism.

Dampers are fire resistant and are intended for systems with automatic activation.

Dampers can be installed in the structure of the fire compartment.

Dampers are designed for use in fire compartments that can be connected to smoke exhaust ducts (tested according to EN 1366-10), or they can be installed in or on the structure of the fire compartment.

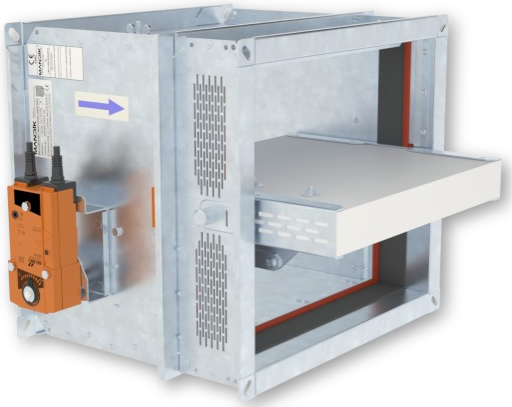

MSD - rectangular

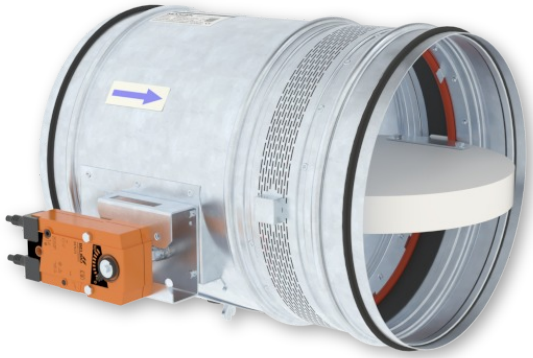

MSD - circular

Basic types of rectangular dampers

- MSD - Cycling test with load (possible design .44, .54, .65)
- MSD-W - Cycling test without load (possible design .44, .54, .4M0, .4M1, .5M0, .5M1)

Basic types of circular dampers

- MSD - Cycling test with load (possible design .44, .54)
- MSD-W - Cycling test without load (possible design .4M0, .4M1, .5M0, .5M1)

MSD dampers can be open against flow and pressure.

MSD-W dampers has to be open with the help of flow or without flow present.

Damper characteristics

- CE certified acc. to EN 12101-8
- Tested in accordance with EN 1366-10
- Classified acc. to EN 13501-4
- External Casing leakage class ATC 3 (old marking “C“), Internal leakage min. class 2 acc. to EN 1751
- Leakage across the blade: circular dampers - min. class 2, diameters from 560 mm to 630 mm
  min. class 3 according to EN 1751
  rectangular dampers - min. class 2, for max. size 1500 × 800 mm
  min. class 3 according to EN 1751
- Cycling: MSD rectangular dampers C_{mod} according to EN 12101-8
  MSD, MSD-W circular dampers C_{10000} according to EN 12101-8
  MSD-W rectangular dampers C_{10000} according to EN 12101-8 (tested without load according to EN 1366-10)
- EC Certificate of Conformity No. 1391-CPR-XXXX/XXXX for MSD
- EC Certificate of Conformity No. 1391-CPR-XXXX/XXXX for MSD-W
- Declaration of Performance No. PM/MSD/01/XX/X, PM/MSD-W/01/XX/X
- Hygienic assessment – Report No. 1.6/pos/19/19c

Classification of rectangular dampers		
Supporting construction	**Installation type**	**Classification**
Horizontal or vertical smoke extraction ducts tested according to EN 1366-8 or EN 1366-9 ● Into or onto the duct	Damper installed Into or onto a duct	EI 120 (h_{od}) S1500[H]C_{mod}HOT400/30AAmulti EI 120 (v_{ed}) S1500[H]C_{mod}HOT400/30AAmulti
Standard low- and high-density rigid wall construction according to EN 1363-1 ● damper in the wall ● 100 mm min. wall thickness	Mortar or gypsum	EI 120 (v_{ew}) S1500[H]C_{mod}HOT400/30AAmulti * EI 120 (v_{ew}) S1500[H]C_{10000}AAmulti
	Ablative Coated Batt	
Standard flexible wall construction min. EI 90 according to EN 1363-1 ● damper in the wall ● 100 mm min. wall thickness	Mortar or gypsum	
	Ablative Coated Batt	
Standard low- and high-density rigid floor construction according to EN 1366-2 ● damper in the ceiling ● 150 mm min. ceiling thickness	Mortar or gypsum	EI 120 (h_{ow}) S1500[H]C_{mod}HOT400/30AAmulti * EI 120 (h_{ow}) S1500[H]C_{10000}AAmulti
	Ablative Coated Batt	EI 90 (h_{ow}) S1500[H]C_{mod}HOT400/30AAmulti E 120 (h_{ow}) S1500[H]C_{mod}HOT400/30AAmulti * EI 120 (h_{ow}) S1500[H]C_{10000}AAmulti

* *Applies to MSD-W damper*

Classification of circular dampers		
Supporting construction	**Installation type**	**Classification**
Standard low- and high-density rigid wall construction according to EN 1363-1 ● damper in the wall ● 125 mm min. wall thickness	Mortar or gypsum	EI 120 (v_{ew}) S1500[H]C_{10000}AAmulti
Standard flexible wall construction min. EI 90 according to EN 1363-1 ● damper in the wall ● 125 mm min. wall thickness	Mortar or gypsum	EI 120 (v_{ew}) S1500[H]C_{10000}AAmulti
Standard low- and high-density rigid floor construction according to EN 1366-2 ● damper in the ceiling ● 150 mm min. ceiling thickness	Mortar or gypsum	EI 120 (h_{ow}) S1500[H]C_{10000}AAmulti

Working conditions

- Exact damper function is provided under the following conditions
  - maximum air velocity 15 m/s
  - underpressure max. -1500 Pa or overpressure max. 500 Pa
- Dampers can be installed with a horizontal blade axis.
- Dampers are designed for macroclimatic areas with mild climate according to EN IEC 60 721-3-3 ed.2., class 3K22. (Environment 3K22 is typically protected place with regulated temperature)
- Temperature in the place of installation is permitted to range from -30 °C to +50 °C.

II. DESIGN

Design with actuating mechanism

Design .44 and .54

- Belimo actuators are used for dampers, series BEN, BEE, BE for 230V AC resp. 24 V AC/DC, Schischek InMax 50.75-S actuators (universal 24V or 230V supply) are used for large size of dampers.
- After connection to the power supply voltage, the actuator moves the damper blade to the "OPEN" position or "CLOSED" (according to the corresponding connection, see wiring diagram). If the power supply is interrupted, the actuator stops at the current position. The signalling of the "OPEN" and "CLOSED" damper blade positions is ensured by two built-in fixed “potential-free” end- limit switches.
- The actuator for operating the damper blade is mounted in an insulated cover/box. It is accessible after removing the cover lid. The electrical connection of the actuator is made with a non-flammable cable (or a cable located in the adjoining cable duct), which passes through an opening made in the wall of the insulated cover/box when installing the damper or when connecting the actuator power cable. Cable penetrations must meet a minimum fire resistance of 30 minutes.

Design .65 - only for rectangular dampers MSD

- Belimo modulating actuators, BEN (BEE)-SR series for 24V AC/DC are specially designed for remote control of smoke control dampers. The position of the damper blade is adjustable by means of control voltage 0 (2)...10V DC.
- The signalling of the "OPEN" and "CLOSED" damper blade positions is ensured by two built-in fixed “potential-free” limit switches.
- The actuator for operating the damper blade is mounted in an insulated cover/box. It is accessible after removing the cover lid. The electrical connection of the actuator is made with non-flammable cables (or cables located in the adjoining cable duct), which pass through an opening made in the wall of the insulated cover when installing the damper or when connecting the power cables of the actuator. Cable penetrations must meet a minimum fire resistance of 30 minutes.

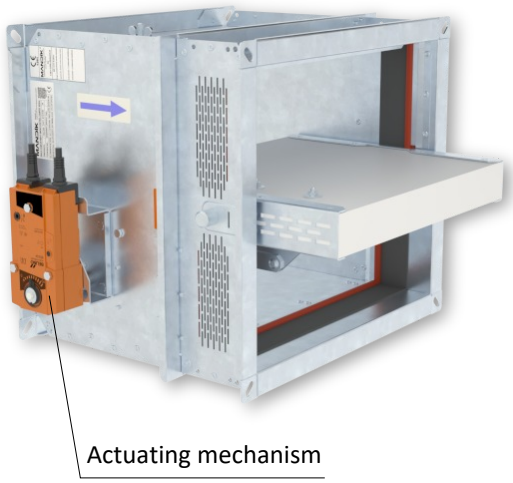

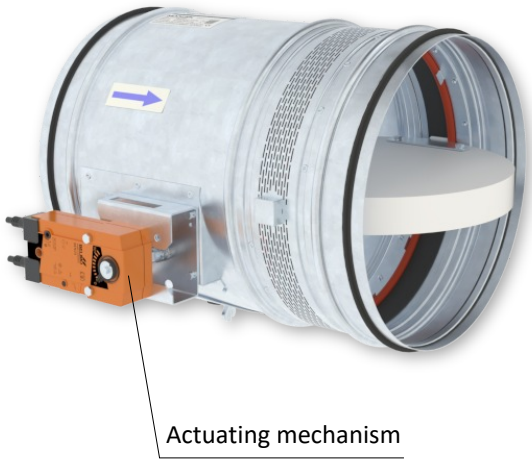

Design .44, .54 and .65

Actuator BELIMO BEN 24(-ST)

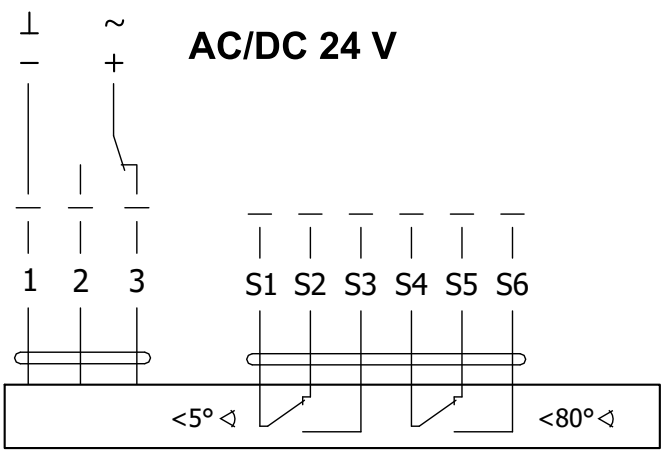

Actuator BELIMO BEN 24-SR

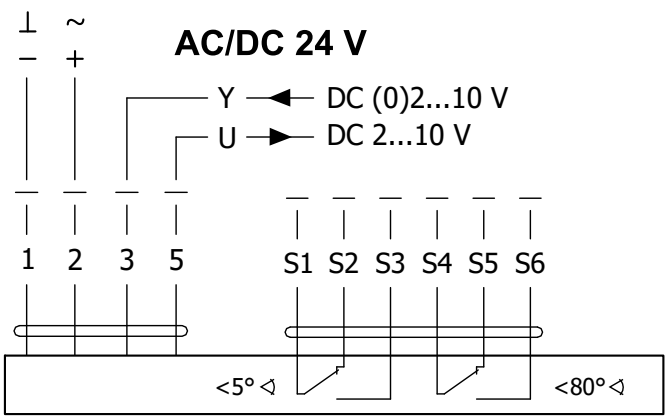

Actuator BELIMO BEN 230

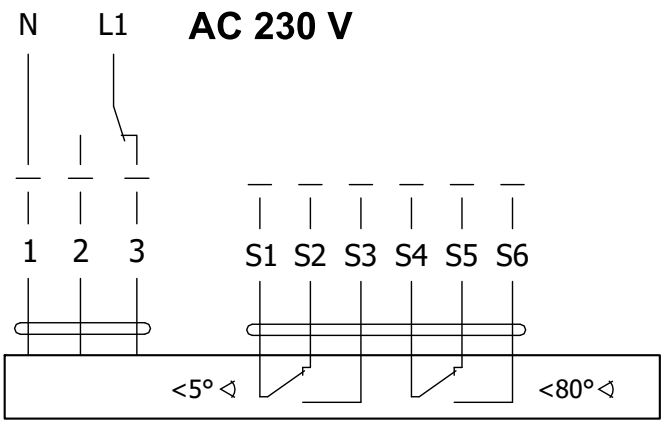

Actuator BELIMO BEN 24(-ST), BEN 24-SR, BEN 230			
Actuator BELIMO - 15 Nm	**BEN 24(-ST)**	**BEN 24-SR***	**BEN 230**
Power voltage	AC/DC 24 V 50/60Hz	AC/DC 24 V 50/60Hz	AC 230 V 50/60Hz
Power consumption - in operation - in the end position	3 W 0,1 W	3 W 0,3 W	4 W 0,4 W
Dimensioning	6 VA (Imax 8,2 A @ 5 ms)	6,5 VA (Imax 8.2 A @ 5 ms)	7 VA (Imax 4 A @ 5 ms)
Protection class	III	III	II
Degree of protection		IP 54	
Adjustment time for 95°		< 30 s	
Ambient temperature Storage temperature		-30°C ... +55°C -40°C ... +80°C	
Connection - drive - auxiliary switch	Cable 1 m, 3 x 0,75 mm² Cable 1 m, 6 x 0,75 mm² (BEN 24-ST) with plug connectors	Cable 1 m, 4 x 0,75 mm² Cable 1 m, 6 x 0,75 mm²	Cable 1 m, 3 x 0,75 mm² Cable 1 m, 6 x 0,75 mm²

* Only available for 24V and selected damper sizes

Actuator BELIMO BEE 24(-ST)

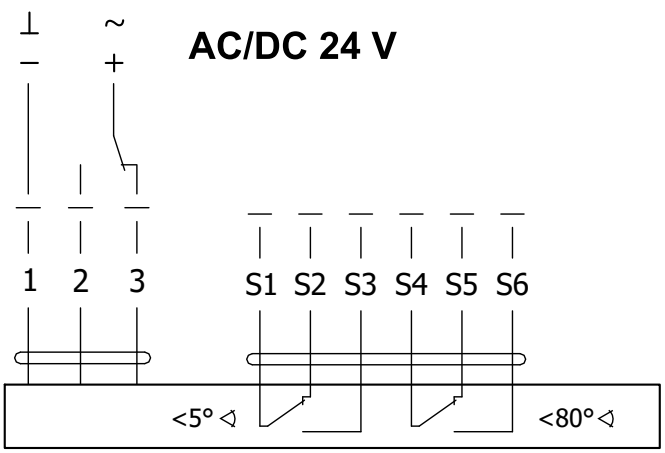

Actuator BELIMO BEE 24-SR

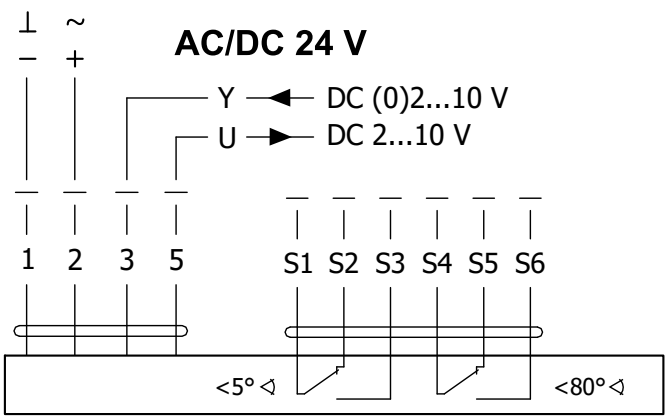

Actuator BELIMO BEE 230

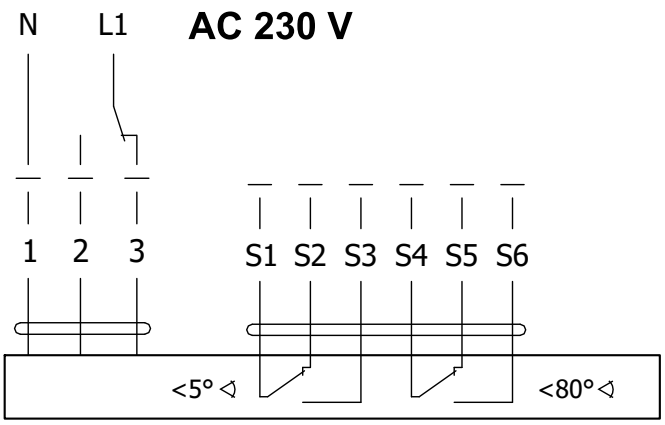

Actuator BELIMO BEE 24(-ST), BEE 24-SR, BEE 230			
Actuator BELIMO - 25 Nm	**BEE 24(-ST)**	**BEE 24-SR***	**BEE 230**
Power voltage	AC/DC 24 V 50/60Hz	AC/DC 24 V 50/60Hz	AC 230 V 50/60Hz
Power consumption - in operation - in the end position	2,5 W 0,1 W	3 W 0,3 W	3,5 W 0,4 W
Dimensioning	5 VA (Imax 8,2 A @ 5 ms)	5,5 VA (Imax 8.2 A @ 5 ms)	6 VA (Imax 4 A @ 5 ms)
Protection class	III	III	II
Degree of protection	IP 54		
Adjustment time for 95°	< 60 s		
Ambient temperature Storage temperature	-30°C ... +55°C -40°C ... +80°C		
Connection - drive - auxiliary switch	Cable 1 m, 3 x 0,75 mm² Cable 1 m, 6 x 0,75 mm² (BEE 24-ST) with plug connectors	Cable 1 m, 4 x 0,75 mm² Cable 1 m, 6 x 0,75 mm²	Cable 1 m, 3 x 0,75 mm² Cable 1 m, 6 x 0,75 mm²

* Only available for 24V and selected damper sizes

Actuator BELIMO BE 24-12(-ST)

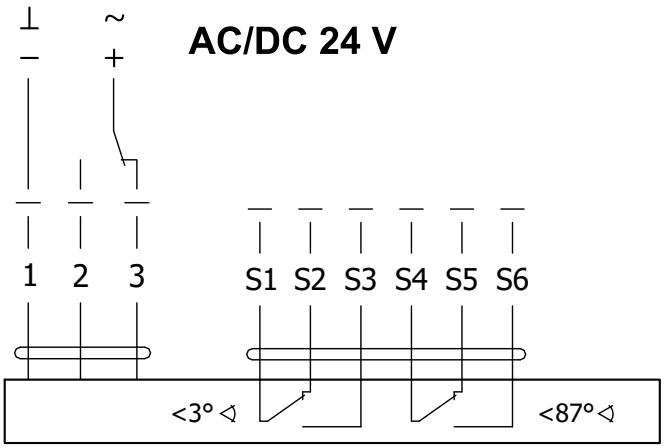

Actuator BELIMO BE 230-12

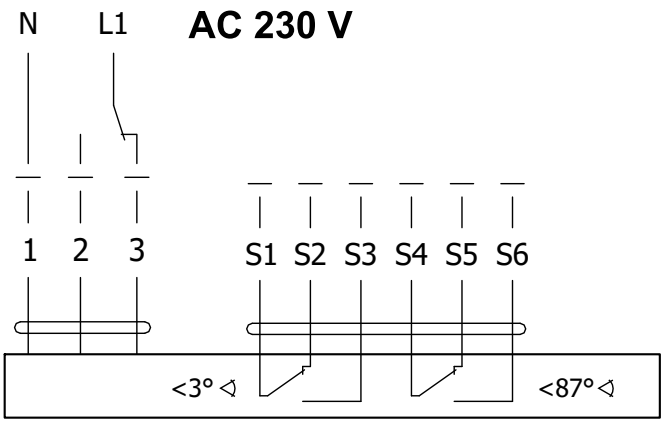

Actuator BELIMO BE 24-12(-ST), BE 230-12		
Actuator BELIMO - 40 Nm	**BE 24-12(-ST)**	**BE 230-12**
Power voltage	AC/DC 24 V 50/60Hz	AC 230 V 50/60Hz
Power consumption - in operation - in the end position	12 W 0,5 W	8 W 0,5 W
Dimensioning	18 VA (Imax 8,2 A @ 5 ms)	15 VA (Imax 7.9 A @ 5 ms)
Protection class	III	II
Degree of protection	IP 54	
Adjustment time for 95°	< 60 s	
Ambient temperature Storage temperature	-30°C … +55°C -40°C … +80°C	
Connection - drive - auxiliary switch	Cable 1 m, 3 x 0,75 mm² Cable 1 m, 6 x 0,75 mm² (BE 24-ST) with plug connectors	

Actuator SCHISCHEK InMax 50.75-S

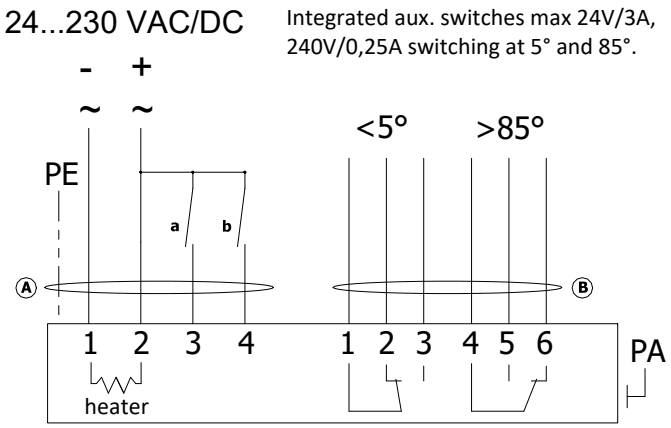

Actuator SCHISCHEK InMax 50.75-S	
Actuator SCHISCHEK	**InMax 50.75-S**
Power voltage	24-240 VAC/DC 50/60Hz
Power consumption - in operation - heating	10 W 16 W (start at -20°C)
Protection class	I
Degree of protection	IP 66
Adjustment time for 95°	< 60 s
Ambient temperature Storage temperature	-40°C … +50°C -40°C … +70°C
Connection	cable 1 m, 0,5 mm^2

Design with electric actuating mechanism with emergency function and electromagnet

Design .4M0, .4M1, .5M0 and .5M1

- MSD-W is always equipped by electric actuating mechanism BFN 230-T, BFN 24-T, DAF2.20S or DAF1.20S (further only "actuating mechanism") and is complemented with initiation by means of an electromagnet (solenoid).
- After being connected to power supply AC/DC 24V or 230V, the actuating mechanism displaces the damper blade into operation position "CLOSED" and at the same time it pre-stretches its back spring. When the actuating mechanism is under voltage, the damper blade is in the position "CLOSED" and the back spring is pre-stretched. Time needed for full closing of the flap blade from the position "OPEN" to the position "CLOSED" is maximum 60 sec. This possition is secured by initional lever. If the actuating power supply is cut off damper is still in the position "CLOSED". After activation of electromagnet is released initiation lever and the back spring displaces the damper blade into the breakdown position "OPEN".
- The time of displacing the blade from the position "OPEN" to the position "CLOSED" takes maximum 16 sec. In case that the power supply is restored again (the blade can be in any position), the actuating mechanism starts to re-displace the damper blade into the position "CLOSED".
- By voltage AC 230 V is damper equipped by electromagnet EM230. By voltage AC/DC 24 V is damper equipped by electromagnet EM230 with pre-pulse switch SIEM24. SEIM24 activates the electromagnet after capacitor charge witch is placed inside of SIEM24. It takes about 10 sec.
- Charging time depends on the current supply. For reliable operation is necessary connect to electromagnet or pre-pulse switch appropriate supply for 2 sec (230 V) or 20 to 30 sec (24 V).

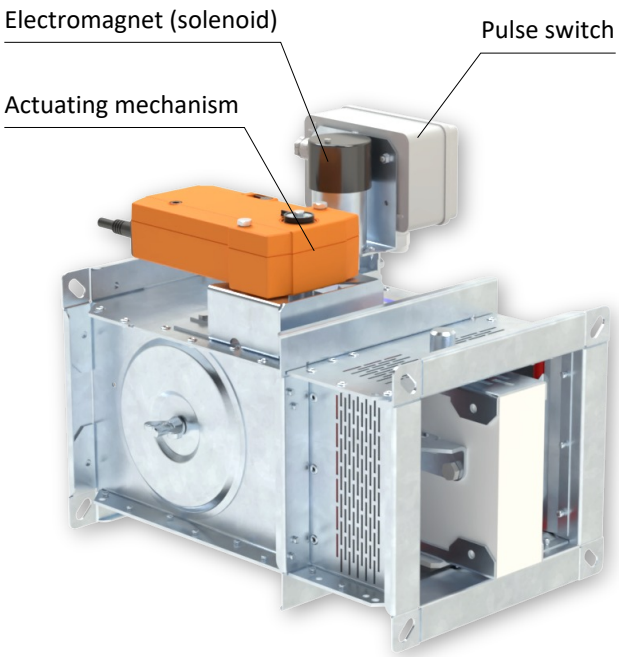

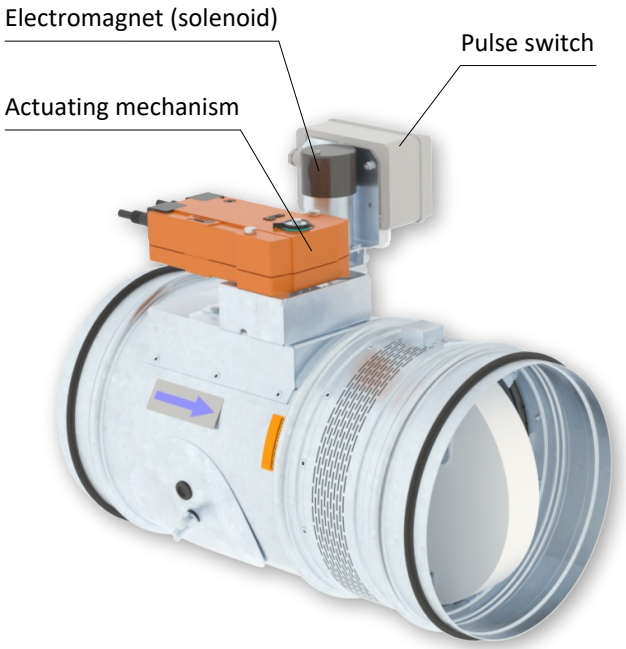

Design .4M0, .4M1, .5M0 and .5M1

Actuator BELIMO BFN 230

AC230 V

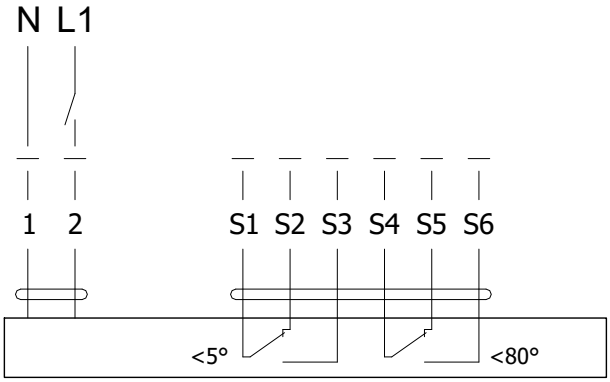

Actuator BELIMO BFN 24

AC/DC 24

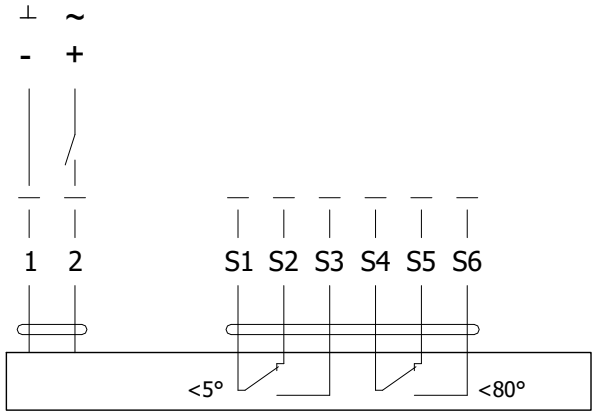

Actuator BELIMO BFN 230, BFN 24		
Actuator BELIMO - 9 Nm/ 7 Nm Spring	**BFN 230**	**BFN 24**
Power voltage	AC 230 V 50/60Hz	AC/DC 24 V 50/60Hz
Power consumption - in operation - in rest position	3,5 W 1,3 W	3,2 W 1,2 W
Dimensioning	6,5 VA (Imax 4 A @ 5 ms)	4,3 VA (Imax 2,9 A @ 5 ms)
Protection class	II	III
Degree of protection	IP 54	
Running time - motor - spring return	< 60 s ~ 20 s	
Ambient temperature - normal duty - safety duty - non-operating temperature	 -30°C … +55°C The safe position will be attained up to max. 75°C -40°C … +55°C	
Connection - supply/control - auxiliary switch	cable 1 m, 2 x 0,75 mm² (BFN 2xx-T-ST) with 3-pin plug-in connectors cable 1 m, 6 x 0,75 mm² (BFN 2xx-T-ST) with 6-pin plug-in connectors	
Response temperature thermal fuse	duct outside temperature +72°C duct inside temperature +72°C	

Actuator Joventa DAF1.20S and DAF2.20S

DAF1.20S

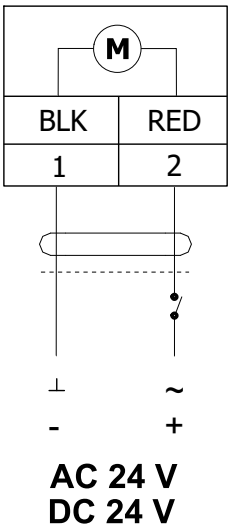

DAF2.20S

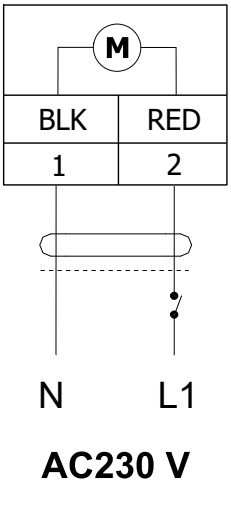

JOVENTA

Limit switches

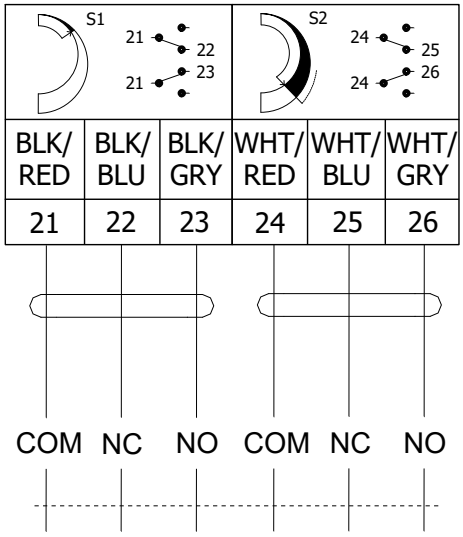

Actuator Joventa DAF1.20S and DAF2.20S		
Actuator Joventa	**DAF1.20S**	**DAF2.20S**
Power voltage	AC/DC 24 V 50/60Hz	AC 230 V 50/60Hz
Power consumption - in operation - in rest position	26 VA (AC); 15,6 W (DC) 9,3 VA (AC); 2,6 W (DC)	0,15 A 0,09 A
Dimensioning	14 VA	14 VA
Protection class	II	II
Degree of protection	IP 54	
Running time - motor - spring return	24...57 s 11...15 s	
Ambient temperature - normal duty - non-operating temperature	-40°C ... +55°C -65°C ... +85°C	
Connection - motor - auxiliary switch	cable 1,2 m halogen-free; 2-wires cable 1,2 m halogen-free; 6-wires	

Electromagnet EM230

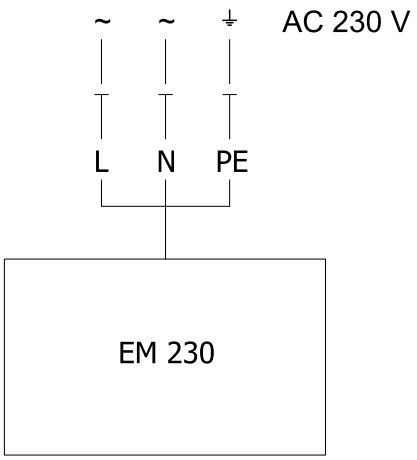

Electromagnet EM230	
Nominal voltage	AC 230 V 50 Hz
Dimensioning	1,2 A
Degree of protection	IP 40
Ambient temperature range	-10°C … +40°C
Connecting	cable 1m, 3x0,75mm²

Electromagnet EM230 with impulse switch SIEM24

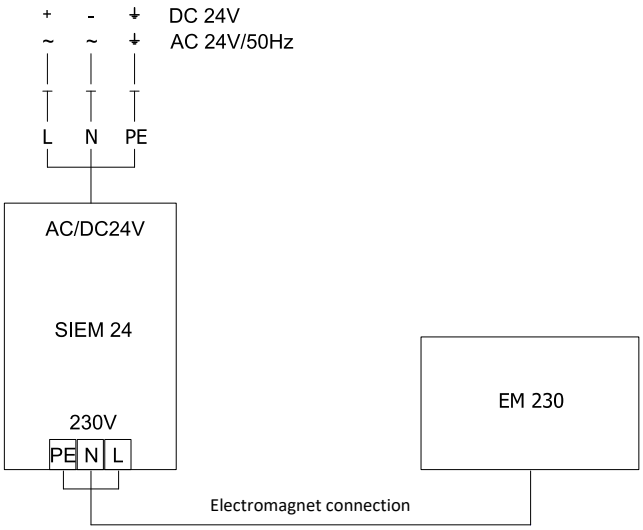

Electromagnet EM230 with impulse switch SIEM24	
Nominal voltage	AC/DC 24 V 50 Hz
Dimensioning	1 A
Degree of protection	IP 40
Ambient temperature range	-10°C … +40°C
Switching frequency	max. 1x per minute
Connecting	cable 1m, 3x0,75mm²

III. DIMENSIONS

Rectangular MSD (MSD-W) - design with actuating mechanism

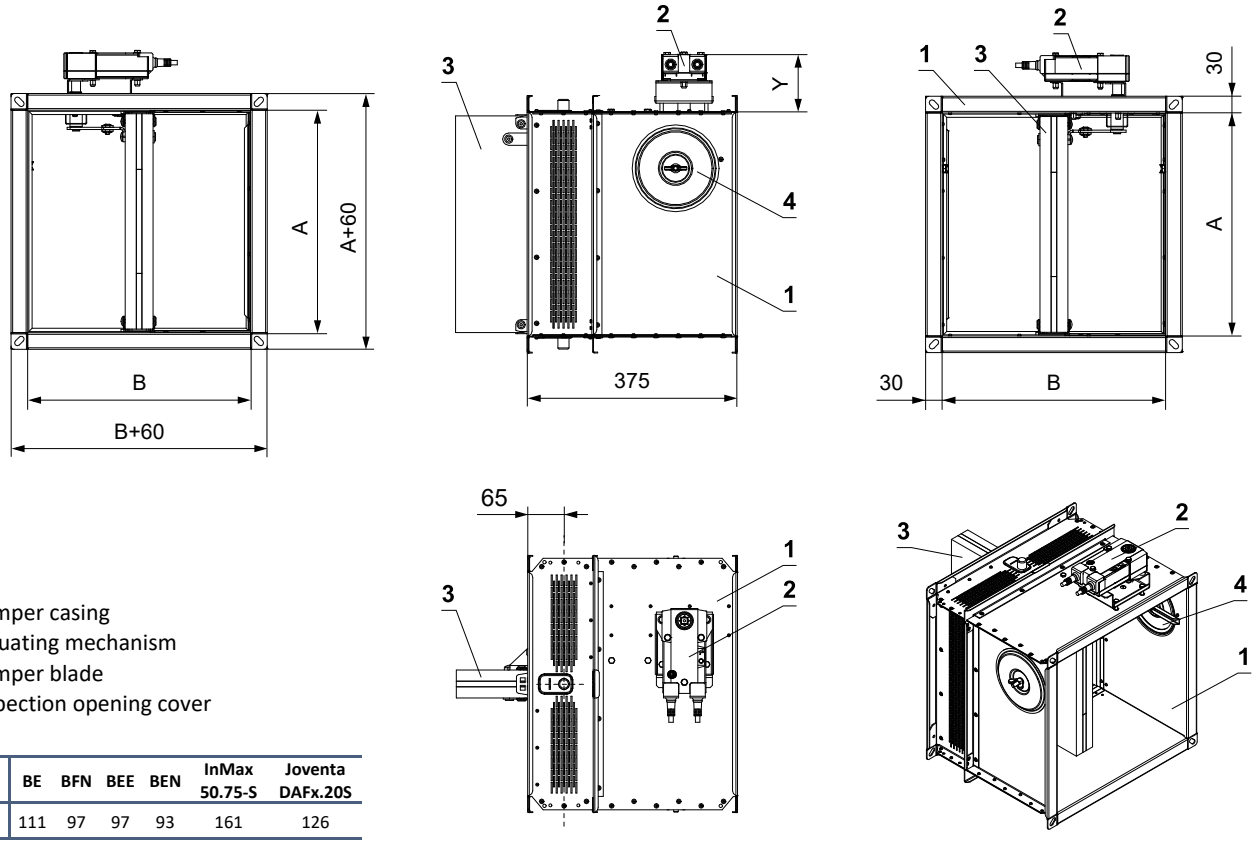

1 Damper casing
2 Actuating mechanism
3 Damper blade
4 Inspection opening cover

	BE	BFN	BEE	BEN	InMax 50.75-S	Joventa DAFx.20S
Y [mm]	111	97	97	93	161	126

Rectangular MSD - design with actuating mechanism and insulation box

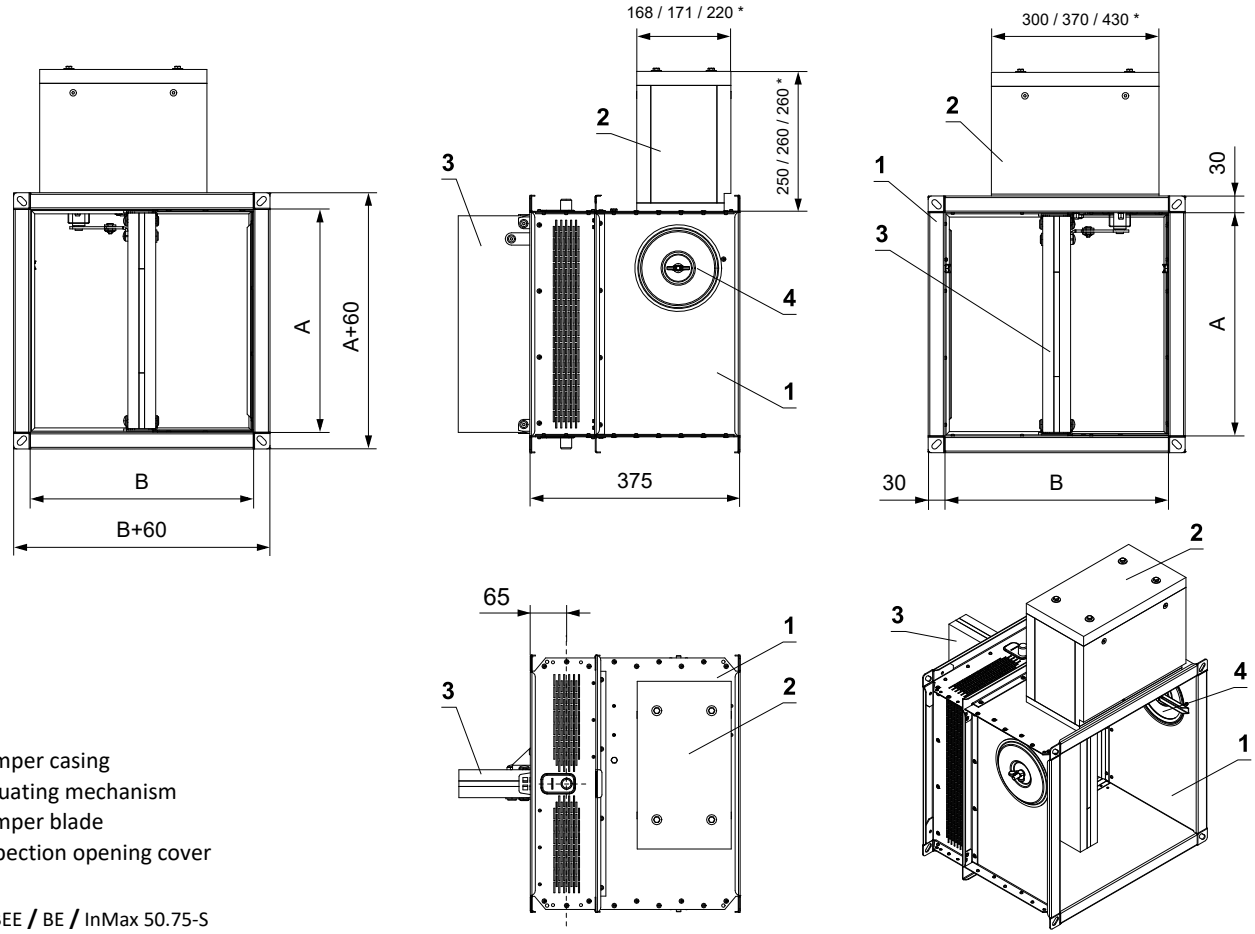

1 Damper casing
2 Actuating mechanism
3 Damper blade
4 Inspection opening cover

* BEN, BEE / BE / InMax 50.75-S

Rectangular MSD (MSD-W) - design with actuating mechanism, insulation box and lining panels

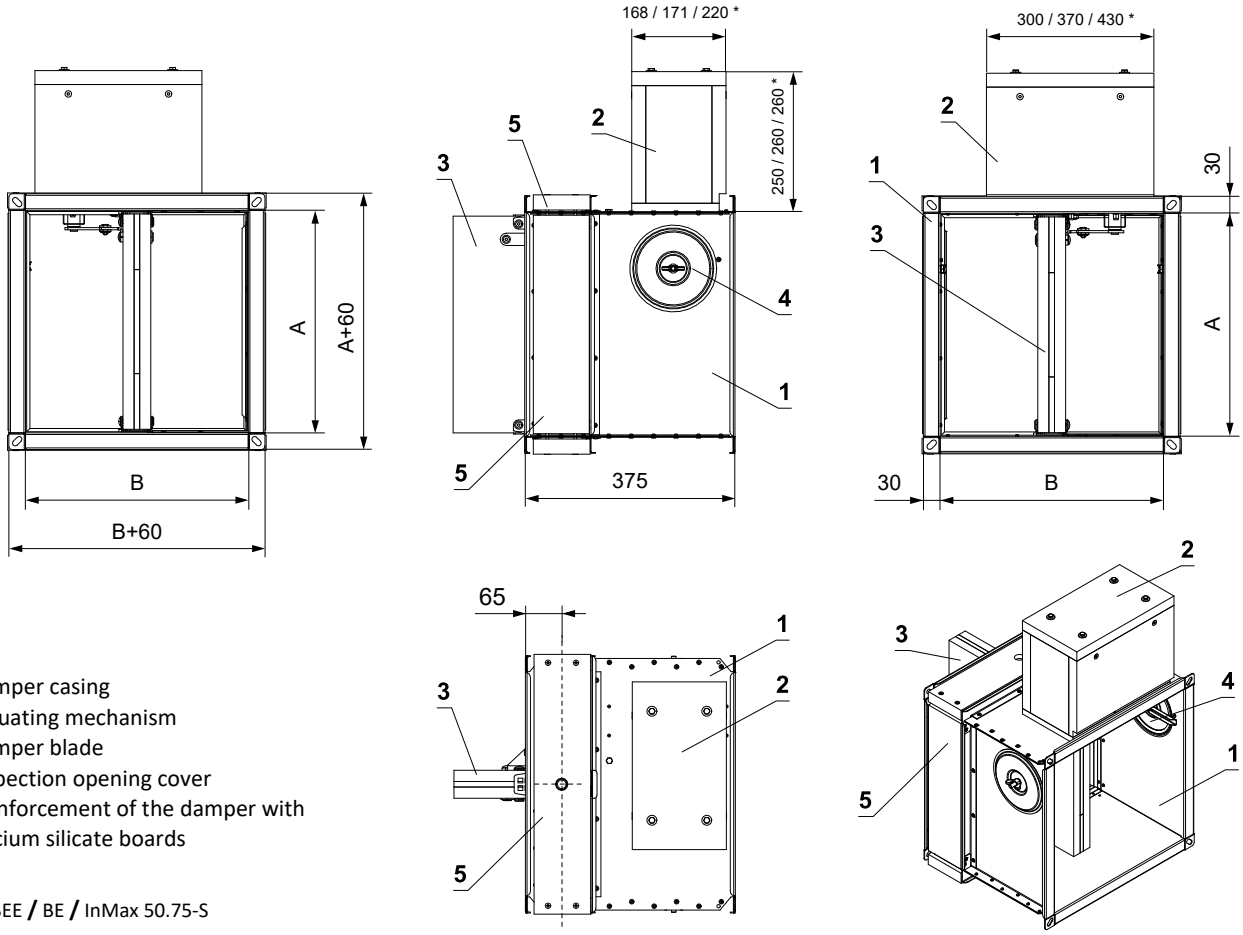

1 Damper casing
2 Actuating mechanism
3 Damper blade
4 Inspection opening cover
5 Reinforcement of the damper with calcium silicate boards

* BEN, BEE / BE / InMax 50.75-S

Rectangular MSD-W - design with actuating mechanism with emergency function and electromagnet

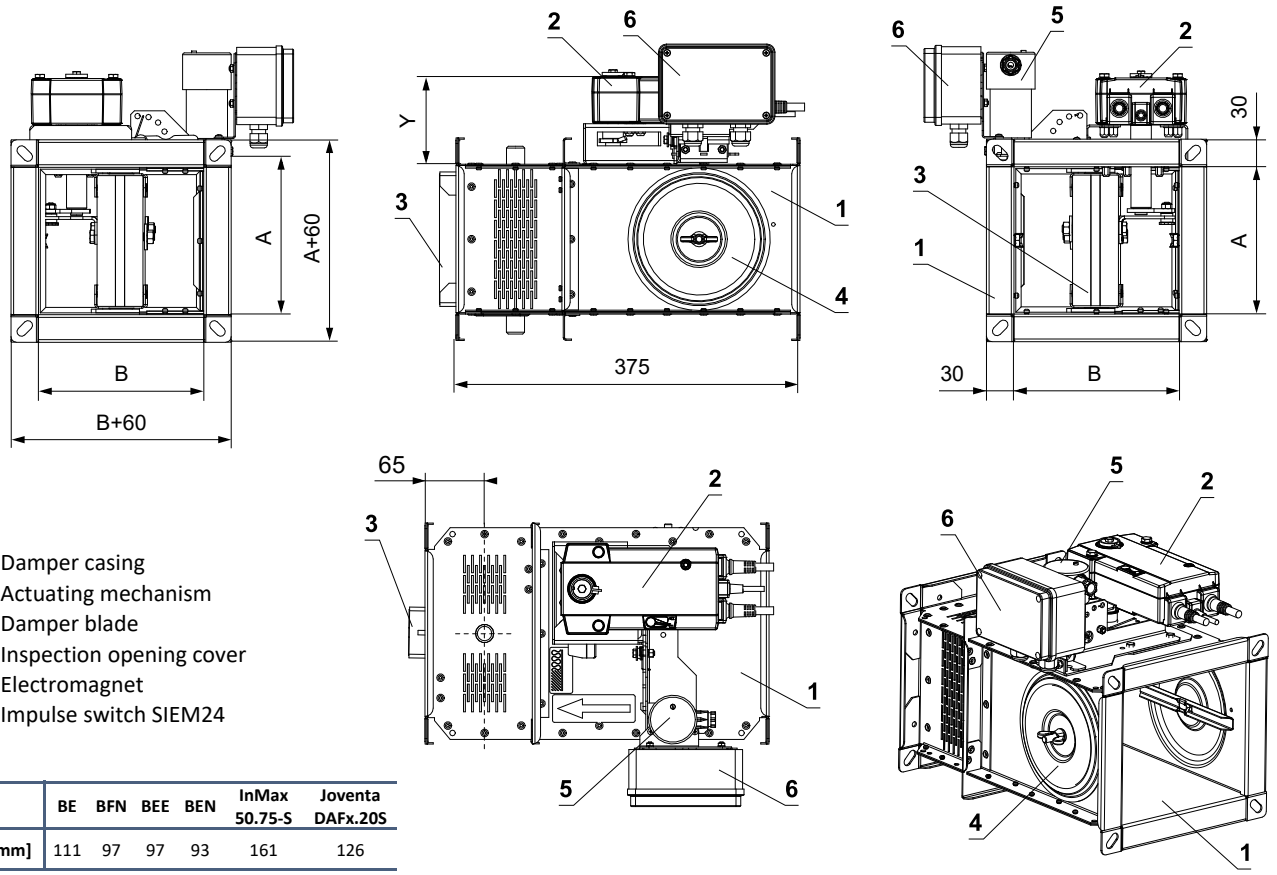

1 Damper casing
2 Actuating mechanism
3 Damper blade
4 Inspection opening cover
5 Electromagnet
6 Impulse switch SIEM24

	BE	BFN	BEE	BEN	InMax 50.75-S	Joventa DAFx.20S
Y [mm]	111	97	97	93	161	126

Circular MSD (MSD-W) - design with actuating mechanism

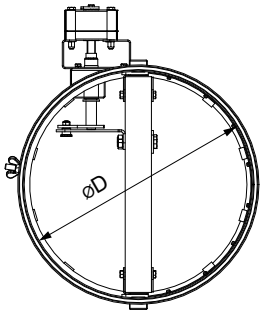

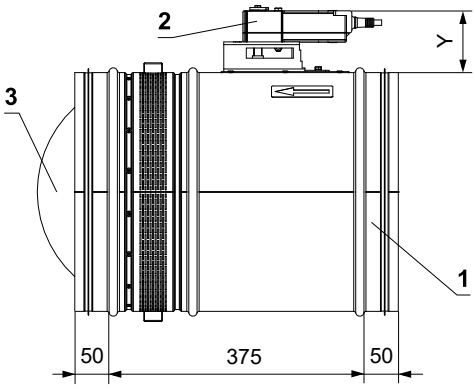

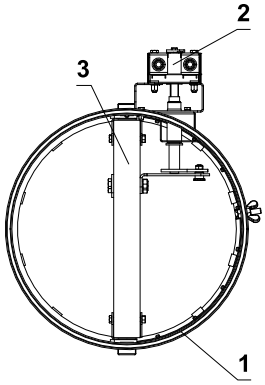

	DN 180 - 200	DN 225 - 280	DN 300 - 630
A [mm]	40	49	72
B [mm]	105	105	154

1 Damper casing
2 Actuating mechanism
3 Damper blade
4 Inspection opening cover
5 Opening for camera

	BE	BFN	BEE	BEN	InMax 50.75-S	Joventa DAFx.20S
Y [mm]	111	97	97	93	161	126

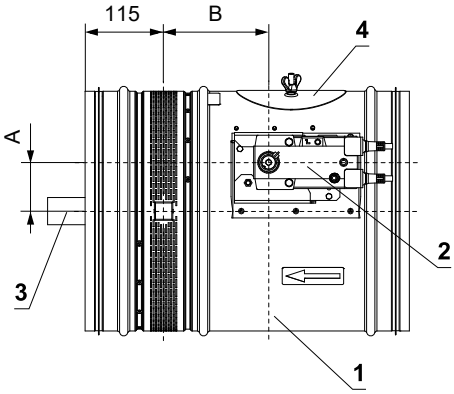

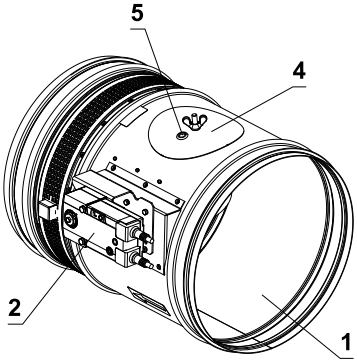

Circular MSD-W - design with actuating mechanism with emergency function and electromagnet

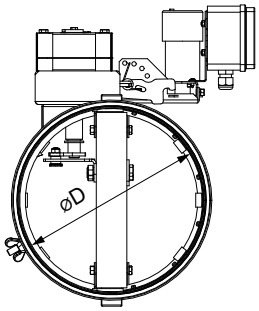

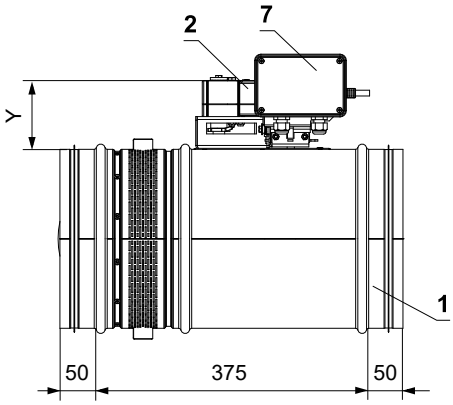

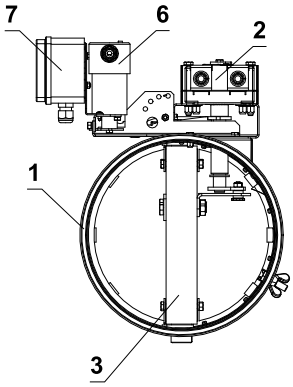

	DN 180 - 200	DN 225 - 280	DN 300 - 630
A [mm]	40	49	72
B [mm]	105	105	154

1 Damper casing
2 Actuating mechanism
3 Damper blade
4 Inspection opening cover
5 Opening for camera
6 Electromagnet
7 Impulse switch SIEM24

	BE	BFN	BEE	BEN	InMax 50.75-S	Joventa DAFx.20S
Y [mm]	111	97	97	93	161	126

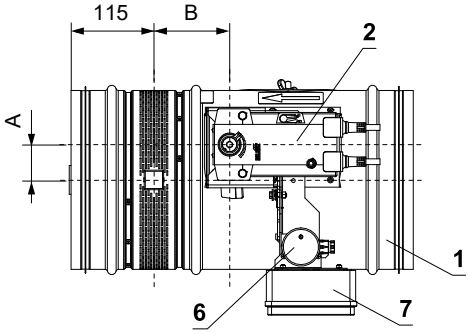

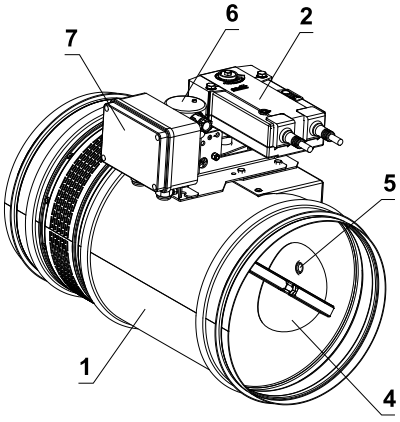

Damper blade overlaps

- Open damper blade overlaps the rectangular damper casing by the value “a” or “c”. These values are specified in chapter Technical parameters → see pages 18 to 27
- Open damper blade overlaps the circular damper casing by the value “f”. These values are specified in chapter Technical parameters → see page 28

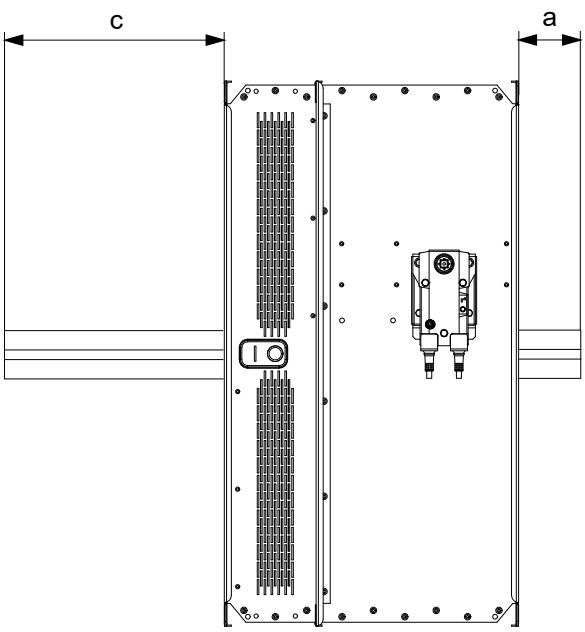

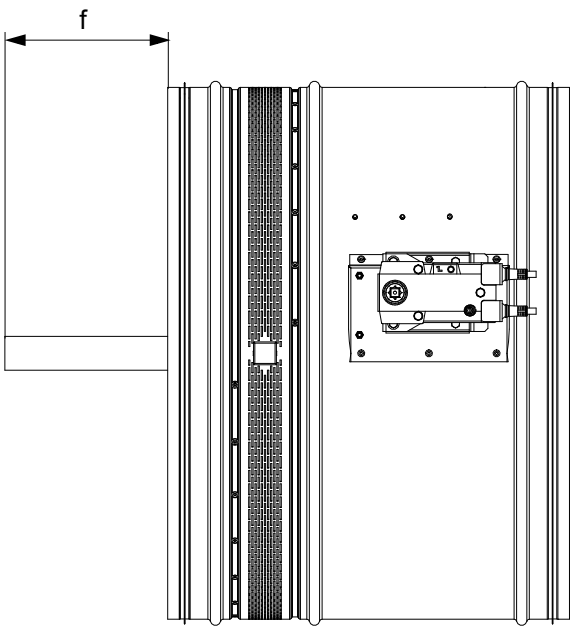

Values "a" ,"c" and "f" has to be respected when projecting following air-conditioning duct.

Flange of a damper

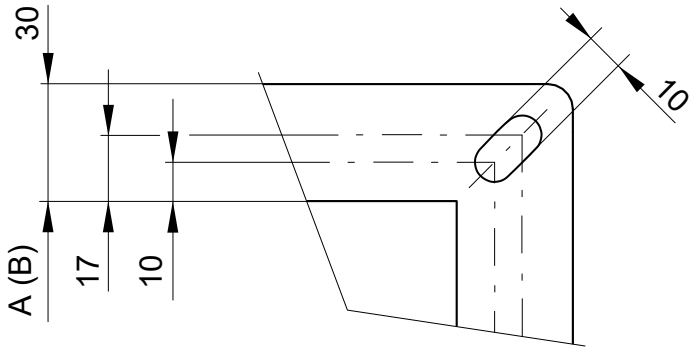

30 mm wide flanges are fitted with oval holes in the corners

Technical parameters

For rectangular dampers

A x B [mm]		Damper blade overlaps		Free area S_f [m²]	MSD-W		MSD-W with electromagnet		MSD	
		a [mm]	c [mm]		Weight [kg]	Actuating mechanism	Weight [kg]	Actuating mechanism	Weight [kg]	Actuating mechanism
160 x	180	–	19	0,0162	9,3	BELIMO BEN	11,4	BELIMO BFN	9,3	BELIMO BEN
	200	–	29	0,0191	9,7		11,8		9,8	
	225	–	41,5	0,0228	10,2		12,3		10,3	
	250	–	54	0,0264	10,7		12,9		10,8	
	280	–	69	0,0307	11,7		13,8		11,5	
	300	–	79	0,0336	12,1		14,3		12,1	
	315	–	86,5	0,0358	12,5		14,6		12,4	
	355	–	106,5	0,0416	13,3		15,4		13,3	
	400	–	129	0,0481	14,2		16,4		14,2	
	450	–	154	0,0554	15,3		17,4		15,3	
	500	–	179	0,0626	16,3		18,5		16,3	
	550	–	204	0,0699	17,4		19,5		17,4	
	560	–	209	0,0713	17,6		19,7		17,6	
	600	–	229	0,0771	18,4		20,6		18,4	
	630	–	244	0,0815	19,1		21,2		19	
	650	9	254	0,0844	19,5		21,6		19,5	
	700	34	279	0,0916	20,6		24,4	JOVENTA DAFx.20S	20,5	
	710	39	284	0,0931	20,8		24,6		20,7	
	750	59	304	0,0989	21,6		25,5		21,6	
	800	84	329	0,1061	22,6		26,5		22,6	
180 x	180	–	19	0,0185	9,6	BELIMO BEN	11,8	BELIMO BFN	9,7	BELIMO BEN
	200	–	29	0,0218	10,1		12,2		10,2	
	225	–	41,5	0,0259	10,6		12,8		10,7	
	250	–	54	0,0300	11,2		13,3		11,3	
	280	–	69	0,0350	12,2		14,3		11,9	
	300	–	79	0,0383	12,6		14,8		12,6	
	315	–	86,5	0,0408	13		15,1		13	
	355	–	106,5	0,0474	13,9		16		13,8	
	400	–	129	0,0548	14,8		17		14,8	
	450	–	154	0,0630	15,9		18,1		15,9	
	500	–	179	0,0713	17		19,2		17	
	550	–	204	0,0795	18,1		20,3		18,1	
	560	–	209	0,0812	18,4		20,5		18,3	
	600	–	229	0,0878	19,2		21,4		19,2	
	630	–	244	0,0927	19,9		22		19,9	
	650	9	254	0,0960	20,3		22,5		20,3	
	700	34	279	0,1043	21,4		25,3	JOVENTA DAFx.20S	21,4	
	710	39	284	0,1059	21,7		25,6		21,6	
	750	59	304	0,1125	22,5		26,4		22,5	
	800	84	329	0,1208	23,6		27,5		23,6	
200 x	180	–	19	0,0207	10	BELIMO BEN	12,2	BELIMO BFN	10,1	BELIMO BEN
	200	–	29	0,0244	10,5		12,6		10,6	
	225	–	41,5	0,0290	11,1		13,2		11,2	
	250	–	54	0,0337	11,6		13,8		11,7	
	280	–	69	0,0392	12,7		14,8		12,4	
	300	–	79	0,0429	13,1		15,3		13,1	
	315	–	86,5	0,0457	13,5		15,6		13,5	
	355	–	106,5	0,0531	14,4		16,5		14,4	
	400	–	129	0,0614	15,4		17,6		15,4	
	450	–	154	0,0707	16,6		18,7		16,6	
	500	–	179	0,0799	17,7		19,9		17,7	
	550	–	204	0,0892	18,9		21		18,9	

A x B [mm]		Damper blade overlaps a [mm]	Damper blade overlaps c [mm]	Free area S_f [m²]	MSD-W Weight [kg]	MSD-W Actuating mechanism	MSD-W with electromagnet Weight [kg]	MSD-W with electromagnet Actuating mechanism	MSD Weight [kg]	MSD Actuating mechanism
200 x	560	–	209	0,0910	19,1	BELIMO BEN	21,2	BELIMO BFN	19,1	BELIMO BEN
	600	–	229	0,0984	20		22,2		20	
	630	–	244	0,1040	20,7		22,8		20,7	
	650	9	254	0,1077	21,2		23,3		21,1	
	700	34	279	0,1169	22,3		26,2	JOVENTA DAFx.20S	22,3	
	710	39	284	0,1188	22,6		26,4		22,5	
	750	59	304	0,1262	23,5		27,4		23,4	
	800	84	329	0,1354	24,6		28,5		24,6	
225 x	180	–	19	0,0235	10,5	BELIMO BEN	12,7	BELIMO BFN	10,6	BELIMO BEN
	200	–	29	0,0277	11		13,1		11,1	
	225	–	41,5	0,0330	11,6		13,7		11,7	
	250	–	54	0,0382	12,2		14,3		12,3	
	280	–	69	0,0445	13,3		15,4		13	
	300	–	79	0,0487	13,8		15,9		13,7	
	315	–	86,5	0,0519	14,1		16,3		14,1	
	355	–	106,5	0,0603	15,1		17,2		15,1	
	400	–	129	0,0697	16,2		18,3		16,1	
	450	–	154	0,0802	17,4		19,5		17,4	
	500	–	179	0,0907	18,6		20,7		18,6	
	550	–	204	0,1012	19,8		21,9		19,8	
	560	–	209	0,1033	20		22,2		20	
	600	–	229	0,1117	21		23,1		21	
	630	–	244	0,1180	21,7		25,6	JOVENTA DAFx.20S	21,7	
	650	9	254	0,1222	22,2		26,1		22,2	
	700	34	279	0,1327	23,4		27,3		23,4	
	710	39	284	0,1348	23,7		27,6		23,6	
	750	59	304	0,1432	24,6		28,5		24,6	
	800	84	329	0,1537	25,8		29,7		25,8	
250 x	180	–	19	0,0263	11	BELIMO BEN	13,1	BELIMO BFN	11,1	BELIMO BEN
	200	–	29	0,0310	11,5		13,6		11,6	
	225	–	41,5	0,0369	12,1		14,3		12,2	
	250	–	54	0,0428	12,8		14,9		12,8	
	280	–	69	0,0498	13,9		16		13,6	
	300	–	79	0,0545	14,4		16,5		14,4	
	315	–	86,5	0,0580	14,8		16,9		14,8	
	355	–	106,5	0,0674	15,8		17,9		15,8	
	400	–	129	0,0780	16,9		19,1		16,9	
	450	–	154	0,0898	18,2		20,3		18,2	
	500	–	179	0,1015	19,5		21,6		19,4	
	550	–	204	0,1133	20,7		22,9		20,7	
	560	–	209	0,1156	21		23,1	JOVENTA DAFx.20S	21	
	600	–	229	0,1250	22		25,9		22	
	630	–	244	0,1321	22,8		26,6		22,7	
	650	9	254	0,1368	23,3		27,1		23,2	
	700	34	279	0,1485	24,5		28,4		24,5	
	710	39	284	0,1509	24,8		28,7		24,8	
	750	59	304	0,1603	25,8		29,7		25,8	
	800	84	329	0,1720	27,1		30,9		27	
280 x	180	–	19	0,0297	11,6	BELIMO BEN	13,7	BELIMO BFN	11,7	BELIMO BEN
	200	–	29	0,0350	12,1		14,3		12,2	
	225	–	42	0,0416	12,8		14,9		12,9	
	250	–	54	0,0482	13,4		15,6		13,5	
	280	–	69	0,0562	14,6		16,7		14,3	
	300	–	79	0,0615	15,1		17,3		15,1	
	315	–	86,5	0,0655	15,6		17,7		15,5	

A x B [mm]		Damper blade overlaps		Free area S_f [m²]	MSD-W		MSD-W with electromagnet		MSD	
		a [mm]	c [mm]		Weight [kg]	Actuating mechanism	Weight [kg]	Actuating mechanism	Weight [kg]	Actuating mechanism
280 x	355	–	106,5	0,0761	16,6	BELIMO BEN	18,8	BELIMO BFN	16,6	BELIMO BEN
	400	–	129	0,0880	17,8		20		17,8	
	450	–	154	0,1012	19,2		21,3		19,1	
	500	–	179	0,1145	20,5		22,6		20,5	
	550	–	204	0,1277	21,8		24		21,8	
	560	–	209	0,1304	22,1		26	JOVENTA DAFx.20S	22,1	
	600	–	229	0,1410	23,2		27,1		23,1	
	630	–	244	0,1489	24		27,9		24	
	650	9	254	0,1542	24,5		28,4		24,5	
	700	34	279	0,1675	25,9		29,8		25,8	
	710	39	284	0,1701	26,1		30		26,1	
	750	59	304	0,1807	27,2		31,1		27,2	
	800	84	329	0,1940	28,5		32,4		28,5	
300 x	180	–	19	0,0319	12	BELIMO BEN	14,1	BELIMO BFN	12,1	BELIMO BEN
	200	–	29	0,0376	12,5		14,7		12,6	
	225	–	41,5	0,0447	13,2		15,4		13,3	
	250	–	54	0,0519	13,9		16,1		14	
	280	–	69	0,0604	15,1		17,2		14,8	
	300	–	79	0,0661	15,6		17,7		15,6	
	315	–	86,5	0,0704	16		18,1		16	
	355	–	106,5	0,0818	17,1		19,2		17	
	400	–	129	0,0946	18,3		20,4		18,2	
	450	–	154	0,1089	19,6		21,8		19,6	
	500	–	179	0,1231	21		23,1		20,9	
	550	–	204	0,1374	22,3		26,2	JOVENTA DAFx.20S	22,3	
	560	–	209	0,1402	22,6		26,5		22,6	
	600	–	229	0,1516	23,7		27,5		23,6	
	630	–	244	0,1602	24,5		28,4		24,4	
	650	9	254	0,1659	25		28,9		25	
	700	34	279	0,1801	26,4		30,3		26,3	
	710	39	284	0,1830	26,6		30,5		26,6	
	750	59	304	0,1944	27,7		31,6		27,7	
	800	84	329	0,2086	29		32,9		29	
315 x	180	–	19	0,0336	12,2	BELIM BEN	14,4	BELIMO BFN	12,3	BELIMO BEN
	200	–	29	0,0396	12,8		15		12,9	
	225	–	41,5	0,0471	13,5		15,7		13,6	
	250	–	54	0,0546	14,2		16,4		14,3	
	280	–	69	0,0636	15,5		17,6		15,2	
	300	–	79	0,0696	15,9		18,1		15,9	
	315	–	86,5	0,0741	16,4		18,5		16,3	
	355	–	106,5	0,0861	17,5		19,6		17,4	
	400	–	129	0,0996	18,7		20,8		18,7	
	450	–	154	0,1146	20,1		22,2		20	
	500	–	179	0,1296	21,4		23,6	JOVENTA DAFx.20S	21,4	
	550	–	204	0,1446	22,8		26,7		22,8	
	560	–	209	0,1476	23,1		27		23,1	
	600	–	229	0,1596	24,2		28,1		24,2	
	630	–	244	0,1686	25		28,9		25	
	650	9	254	0,1746	25,6		29,5		25,5	
	700	34	279	0,1896	27		30,8		26,9	
	710	39	284	0,1926	27,2		31,1		27,2	
	750	59	304	0,2046	28,3		32,2		28,3	
	800	84	329	0,2196	29,7		33,6		29,7	
355 x	180	–	19	0,0381	13	BELIMO BEN	15,2	BELIMO BFN	13,1	BELIMO BEN
	200	–	29	0,0449	13,6		15,8		13,7	

A x B [mm]		Damper blade overlaps a [mm]	Damper blade overlaps c [mm]	Free area S_f [m²]	MSD-W Weight [kg]	MSD-W Actuating mechanism	MSD-W with electromagnet Weight [kg]	MSD-W with electromagnet Actuating mechanism	MSD Weight [kg]	MSD Actuating mechanism
355 x	225	–	41,5	0,0534	14,4	BELIMO BEN	16,5	BELIMO BFN	14,5	BELIMO BEN
	250	–	54	0,0619	15,2		17,3		15,2	
	280	–	69	0,0721	16,4		18,6		16,2	
	300	–	79	0,0789	16,9		19,1		16,9	
	315	–	86,5	0,0840	17,4		19,5		17,3	
	355	–	106,5	0,0976	18,5		20,7		18,5	
	400	–	129	0,1129	19,8		22		19,8	
	450	–	154	0,1299	21,3		23,4		21,2	
	500	–	179	0,1469	22,7		26,6	JOVENTA DAFx.20S	22,7	
	550	–	204	0,1639	24,2		28,1		24,2	
	560	–	209	0,1673	24,5		28,4		24,4	
	600	–	229	0,1809	25,6		29,5		25,6	
	630	–	244	0,1911	26,5		30,4		26,5	
	650	9	254	0,1979	27,1		31		27,1	
	700	34	279	0,2149	28,5		32,4		28,5	
	710	39	284	0,2183	28,8		32,7		28,8	
	750	59	304	0,2319	30		33,9		30	
	800	84	329	0,2489	31,4		35,3		31,7	BELIMO BEE
400 x	180	–	19	0,0431	13,9	BELIMO BEN	16	BELIMO BFN	14	BELIMO BEN
	200	–	29	0,0508	14,6		16,7		14,6	
	225	–	41,5	0,0604	15,4		17,5		15,5	
	250	–	54	0,0701	16,2		18,3		16,3	
	280	–	69	0,0816	17,5		19,6		17,2	
	300	–	79	0,0893	18		20,1		18	
	315	–	86,5	0,0951	18,5		20,6		18,5	
	355	–	106,5	0,1105	19,7		21,8		19,7	
	400	–	129	0,1278	21,1		23,2		21,1	
	450	–	154	0,1471	22,6		24,8		22,6	
	500	–	179	0,1663	24,2		28,1	JOVENTA DAFx.20S	24,1	
	550	–	204	0,1856	25,7		29,6		25,7	
	560	–	209	0,1894	26		29,9		26	
	600	–	229	0,2048	27,2		31,1		27,2	
	630	–	244	0,2164	28,2		32,1		28,1	
	650	9	254	0,2241	28,8		32,7		28,8	
	700	34	279	0,2433	30,3		34,2		30,3	
	710	39	284	0,2472	30,6		34,5		30,6	
	750	59	304	0,2626	31,9		35,8		31,8	
	800	84	329	0,2818	33,4		37,3		33,6	BELIMO BEE
450 x	180	–	19	0,0487	14,9	BELIMO BEN	17	BELIMO BFN	15	BELIMO BEN
	200	–	29	0,0574	15,6		17,7		15,7	
	225	–	41,5	0,0683	16,4		18,6		16,5	
	250	–	54	0,0792	17,3		19,5		17,4	
	280	–	69	0,0922	18,7		20,9		18,5	
	300	–	79	0,1009	19,2		21,4		19,2	
	315	–	86,5	0,1074	19,7		21,9		19,7	
	355	–	106,5	0,1248	21		23,2		21	
	400	–	129	0,1444	22,5		24,6		22,5	
	450	–	154	0,1662	24,1		28	JOVENTA DAFx.20S	24,1	
	500	–	179	0,1879	25,8		29,7		25,7	
	550	–	204	0,2097	27,4		31,3		27,4	
	560	–	209	0,2140	27,7		31,6		27,7	
	600	–	229	0,2314	29		32,9		29	
	630	–	244	0,2445	30		33,9		30	
	650	9	254	0,2532	30,7		34,5		30,6	
	700	34	279	0,2749	32,3		36,2		32,3	

A x B [mm]		Damper blade overlaps a [mm]	Damper blade overlaps c [mm]	Free area S_f [m²]	MSD-W Weight [kg]	MSD-W Actuating mechanism	MSD-W with electromagnet Weight [kg]	MSD-W with electromagnet Actuating mechanism	MSD Weight [kg]	MSD Actuating mechanism
450 x	710	39	284	0,2793	32,6	BELIMO BEN	36,5	JOVENTA DAFx.20S	32,6	BELIMO BEN
	750	59	304	0,2967	33,9		37,8		33,9	
	800	84	329	0,3184	35,6		39,5		35,8	BELIMO BEE
500 x	180	–	19	0,0543	15,8	BELIMO BEN	18	BELIMO BFN	15,9	BELIMO BEN
	200	–	29	0,0640	16,6		18,7		16,7	
	225	–	41,5	0,0761	17,5		19,7		17,6	
	250	–	54	0,0883	18,4		20,6		18,5	
	280	–	69	0,1028	19,9		22,1		19,7	
	300	–	79	0,1125	20,4		22,6		20,4	
	315	–	86,5	0,1198	21		23,1		20,9	
	355	–	106,5	0,1392	22,4		24,5		22,3	
	400	–	129	0,1610	23,9		26		23,9	
	450	–	154	0,1853	25,6		29,5	JOVENTA DAFx.20S	25,6	
	500	–	179	0,2095	27,4		31,2		27,3	
	550	–	204	0,2338	29,1		33		29,1	
	560	–	209	0,2386	29,4		33,3		29,4	
	600	–	229	0,2580	30,8		34,7		30,8	
	630	–	244	0,2726	31,9		35,7		31,8	
	650	9	254	0,2823	32,5		36,4		32,5	
	700	34	279	0,3065	34,3		38,2		34,3	
	710	39	284	0,3114	34,6		38,5		34,6	
	750	59	304	0,3308	36		39,9		36	
	800	84	329	0,3550	37,7		41,6		38	BELIMO BEE
550 x	180	–	19	0,0599	16,8	BELIMO BEN	18,9	BELIMO BFN	16,9	BELIMO BEN
	200	–	29	0,0706	17,6		19,7		17,7	
	225	–	41,5	0,0840	18,6		20,7		18,7	
	250	–	54	0,0974	19,6		21,7		19,7	
	280	–	69	0,1134	21,1		23,3		20,9	
	300	–	79	0,1241	21,7		23,8		21,6	
	315	–	86,5	0,1321	22,2		24,3		22,2	
	355	–	106,5	0,1535	23,7		25,8		23,6	
	400	–	129	0,1776	25,3		29,2	JOVENTA DAFx.20S	25,3	
	450	–	154	0,2044	27,1		31		27,1	
	500	–	179	0,2311	29		32,8		28,9	
	550	–	204	0,2579	30,8		34,7		30,8	
	560	–	209	0,2632	31,1		35		31,1	
	600	–	229	0,2846	32,6		36,5		32,6	
	630	–	244	0,3007	33,7		37,6		33,7	
	650	9	254	0,3114	34,4		38,3		34,4	
	700	34	279	0,3381	36,3		40,2		36,2	
	710	39	284	0,3435	36,6		40,5		36,6	
	750	59	304	0,3649	38,1		42		38,3	BELIMO BEE
	800	84	329	0,3916	39,9		43,8		40,1	
560 x	180	–	19	0,0610	17	BELIMO BEN	19,1	BELIMO BFN	17,1	BELIMO BEN
	200	–	29	0,0719	17,8		19,9		17,9	
	225	–	42	0,0856	18,8		20,9		18,9	
	250	–	54	0,0992	19,8		21,9		19,9	
	280	–	69	0,1155	21,4		23,5		21,1	
	300	–	79	0,1264	21,9		24		21,9	
	315	–	87	0,1346	22,5		24,6		22,4	
	355	–	106,5	0,1564	23,9		26,1		23,9	
	400	–	129	0,1809	25,6		29,5	JOVENTA DAFx.20S	25,6	
	450	–	154	0,2082	27,4		31,3		27,4	
	500	–	179	0,2354	29,3		33,2		29,2	
	550	–	204	0,2627	31,1		35		31,1	

A x B [mm]		Damper blade overlaps a [mm]	Damper blade overlaps c [mm]	Free area S_f [m²]	MSD-W Weight [kg]	MSD-W Actuating mechanism	MSD-W with electromagnet Weight [kg]	MSD-W with electromagnet Actuating mechanism	MSD Weight [kg]	MSD Actuating mechanism
560 x	560	–	209	0,2681	31,5	BELIMO BEN	35,4	JOVENTA DAFx.20S	31,5	BELIMO BEN
	600	–	229	0,2899	33		36,8		32,9	
	630	–	244	0,3063	34,1		38		34	
	650	9	254	0,3172	34,8		38,7		34,8	
	700	34	279	0,3444	36,7		40,6		36,6	
	710	39	284	0,3499	37		40,9		37	
	750	59	304	0,3717	38,5		42,4		38,7	BELIMO BEE
	800	84	329	0,3989	40,3		44,2		40,6	
600 x	180	–	19	0,0655	17,8	BELIMO BEN	19,9	BELIMO BFN	17,8	BELIMO BEN
	200	–	29	0,0772	18,6		20,8		18,7	
	225	–	41,5	0,0918	19,6		21,8		19,7	
	250	–	54	0,1065	20,7		22,9		20,8	
	280	–	69	0,1240	22,3		24,5		22,1	
	300	–	79	0,1357	22,9		25		22,8	
	315	–	86,5	0,1445	23,4		25,6		23,4	
	355	–	106,5	0,1679	25		27,1		25	
	400	–	129	0,1942	26,7		30,6	JOVENTA DAFx.20S	26,7	
	450	–	154	0,2235	28,6		32,5		28,6	
	500	–	179	0,2527	30,5		34,4		30,5	
	550	–	204	0,2820	32,5		36,4		32,4	
	560	–	209	0,2878	32,9		36,7		32,8	
	600	–	229	0,3112	34,4		38,3		34,4	
	630	–	244	0,3288	35,5		39,4		35,5	
	650	9	254	0,3405	36,3		40,2		36,3	
	700	34	279	0,3697	38,2		42,1		38,2	
	710	39	284	0,3756	38,6		42,5		38,8	BELIMO BEE
	750	59	304	0,3990	40,2		44,1		40,4	
	800	84	329	0,4282	42,1		46		42,3	
630 x	180	–	19	0,0689	18,3	BELIMO BEN	20,5	BELIMO BFN	18,4	BELIMO BEN
	200	–	29	0,0812	19,2		21,4		19,3	
	225	–	41,5	0,0966	20,3		22,4		20,4	
	250	–	54	0,1119	21,4		23,5		21,5	
	280	–	69	0,1304	23,1		25,2		22,8	
	300	–	79	0,1427	23,6		25,7		23,6	
	315	–	86,5	0,1519	24,2		26,3		24,2	
	355	–	106,5	0,1765	25,8		27,9		25,8	
	400	–	129	0,2042	27,5		31,4	JOVENTA DAFx.20S	27,5	
	450	–	154	0,2349	29,5		33,4		29,5	
	500	–	179	0,2657	31,5		35,4		31,5	
	550	–	204	0,2964	33,5		37,4		33,5	
	560	–	209	0,3026	33,9		37,8		33,9	
	600	–	229	0,3272	35,5		39,4		35,4	
	630	–	244	0,3456	36,7		40,5		36,6	
	650	9	254	0,3579	37,4		41,3		37,4	
	700	34	279	0,3887	39,4		43,3		39,4	
	710	39	284	0,3948	39,8		43,7		40	BELIMO BEE
	750	59	304	0,4194	41,4		45,3		41,6	
	800	84	329	0,4502	43,4		47,3		45,4	BELIMO BE
650 x	180	–	19	0,0711	18,7	BELIMO BEN	20,9	BELIMO BFN	18,8	BELIMO BEN
	200	–	29	0,0838	19,6		21,8		19,7	
	225	–	41,5	0,0997	20,7		22,9		20,8	
	250	–	54	0,1156	21,8		24		21,9	
	280	–	69	0,1346	23,5		25,7		23,3	
	300	–	79	0,1473	24,1		26,2		24	
	315	–	86,5	0,1568	24,7		26,8		24,7	

A x B [mm]		Damper blade overlaps a [mm]	Damper blade overlaps c [mm]	Free area S_f [m²]	MSD-W Weight [kg]	MSD-W Actuating mechanism	MSD-W with electromagnet Weight [kg]	MSD-W with electromagnet Actuating mechanism	MSD Weight [kg]	MSD Actuating mechanism
650 x	355	–	106,5	0,1822	26,3	BELIMO BEN	28,4	BELIMO BFN	26,3	BELIMO BEN
	400	–	129	0,2108	28,1		32	JOVENTA DAFx.20S	28,1	
	450	–	154	0,2426	30,1		34		30,1	
	500	–	179	0,2743	32,1		36		32,1	
	550	–	204	0,3061	34,2		38,1		34,1	
	560	–	209	0,3124	34,6		38,5		34,5	
	600	–	229	0,3378	36,2		40,1		36,2	
	630	–	244	0,3569	37,4		41,3		37,4	
	650	9	254	0,3696	38,2		42,1		38,2	
	700	34	279	0,4013	40,2		44,1		40,4	BELIMO BEE
	710	39	284	0,4077	40,6		44,5		40,8	
	750	59	304	0,4331	42,2		46,1		42,5	
	800	84	329	0,4648	44,3		48,1		46,3	BELIMO BE
700 x	180	–	19	0,0767	19,7	BELIMO BEN	21,8	BELIMO BFN	19,8	BELIMO BEN
	200	–	29	0,0904	20,6		22,8		20,7	
	225	–	41,5	0,1075	21,8		23,9		21,9	
	250	–	54	0,1247	23		25,1		23,1	
	280	–	69	0,1452	24,7		26,9		24,5	
	300	–	79	0,1589	25,3		27,4		25,3	
	315	–	86,5	0,1692	25,9		28,1		25,9	
	355	–	106,5	0,1966	27,6		31,5	JOVENTA DAFx.20S	27,6	
	400	–	129	0,2274	29,5		33,4		29,5	
	450	–	154	0,2617	31,6		35,5		31,6	
	500	–	179	0,2959	33,7		37,6		33,7	
	550	–	204	0,3302	35,9		39,7		35,8	
	560	–	209	0,3370	36,3		40,2		36,3	
	600	–	229	0,3644	38		41,9		37,9	
	630	–	244	0,3850	39,2		43,1		39,2	
	650	9	254	0,3987	40,1		44		40,3	BELIMO BEE
	700	34	279	0,4329	42,2		46,1		42,4	
	710	39	284	0,4398	42,6		46,5		42,8	
	750	59	304	0,4672	44,3		48,2		44,5	
	800	84	329	0,5014	46,4		50,3		48,5	BELIMO BE
710 x	180	–	19	0,0778	19,9	BELIMO BEN	22	BELIMO BFN	20	BELIMO BEN
	200	–	29	0,0917	20,8		23		20,9	
	225	–	41,5	0,1091	22		24,2		22,1	
	250	–	54	0,1265	23,2		25,3		23,3	
	280	–	69	0,1473	25		27,1		24,7	
	300	–	79	0,1612	25,5		27,7		25,5	
	315	–	86,5	0,1717	26,2		28,3		26,2	
	355	–	106,5	0,1995	27,9		31,8	JOVENTA DAFx.20S	27,9	
	400	–	129	0,2307	29,8		33,7		29,8	
	450	–	154	0,2655	31,9		35,8		31,9	
	500	–	179	0,3002	34,1		38		34	
	550	–	204	0,3350	36,2		40,1		36,2	
	560	–	209	0,3419	36,6		40,5		36,6	
	600	–	229	0,3697	38,3		42,2		38,3	
	630	–	244	0,3906	39,6		43,5		39,6	
	650	9	254	0,4045	40,5		44,4		40,7	BELIMO BEE
	700	34	279	0,4392	42,6		46,5		42,8	
	710	39	284	0,4462	43		46,9		43,2	
	750	59	304	0,4740	44,7		48,6		46,8	BELIMO BE
	800	84	329	0,5087	46,9		50,8		48,9	
750 x	180	–	19	0,0823	20,7	BELIMO BEN	22,8	BELIMO BFN	20,8	BELIMO BEN
	200	–	29	0,0970	21,7		23,8		21,7	

A x B [mm]		Damper blade overlaps a [mm]	Damper blade overlaps c [mm]	Free area S_f [m²]	MSD-W Weight [kg]	MSD-W Actuating mechanism	MSD-W with electromagnet Weight [kg]	MSD-W with electromagnet Actuating mechanism	MSD Weight [kg]	MSD Actuating mechanism
750 x	225	–	41,5	0,1154	22,9	BELIMO BEN	25	BELIMO BFN	23	BELIMO BEN
	250	–	54	0,1338	24,1		26,3		24,2	
	280	–	69	0,1558	26		28,1		25,7	
	300	–	79	0,1705	26,5		28,6		26,5	
	315	–	86,5	0,1815	27,2		29,3		27,2	
	355	–	106,5	0,2109	29		32,8	JOVENTA DAFx.20S	28,9	
	400	–	129	0,2440	30,9		34,8		30,9	
	450	–	154	0,2808	33,1		37		33,1	
	500	–	179	0,3175	35,4		39,2		35,3	
	550	–	204	0,3543	37,6		41,5		37,5	
	560	–	209	0,3616	38		41,9		38	
	600	–	229	0,3910	39,8		43,7		39,7	
	630	–	244	0,4131	41,1		45		41,1	
	650	9	254	0,4278	42		45,9		42,2	BELIMO BEE
	700	34	279	0,4645	44,2		48,1		44,4	
	710	39	284	0,4719	44,6		48,5		44,9	
	750	59	304	0,5013	46,4		50,3		48,4	BELIMO BE
	800	84	329	0,5380	48,6		52,5		50,6	
800 x	180	–	19	0,0879	21,6	BELIMO BEN	23,8	BELIMO BFN	21,7	BELIMO BEN
	200	–	29	0,1036	22,7		24,8		22,8	
	225	–	41,5	0,1232	23,9		26,1		24	
	250	–	54	0,1429	25,2		27,4		25,3	
	280	–	69	0,1664	27,2		29,3		26,9	
	300	–	79	0,1821	27,8		29,9		27,8	
	315	–	86,5	0,1939	28,5		30,6		28,5	
	355	–	106,5	0,2253	30,4		34,3	JOVENTA DAFx.20S	30,4	
	400	–	129	0,2606	32,5		36,4		32,5	
	450	–	154	0,2999	34,9		38,7		34,8	
	500	–	179	0,3391	37,2		41,1		37,2	
	550	–	204	0,3784	39,6		43,5		39,5	
	560	–	209	0,3862	40		43,9		40	
	600	–	229	0,4176	41,9		45,8		41,9	
	630	–	244	0,4412	43,3		47,2		43,6	BELIMO BEE
	650	9	254	0,4569	44,3		48,2		44,5	
	700	34	279	0,4961	46,6		50,5		46,9	
	710	39	284	0,5040	47,1		51		49,1	BELIMO BE
	750	59	304	0,5354	49		52,9		51	
	800	84	329	0,5746	51,3		55,2		53,4	
900 x	180	–	19	0,0991	23,6	BELIMO BEN	25,7	BELIMO BFN	23,7	BELIMO BEN
	200	–	29	0,1168	24,7		26,8		24,8	
	225	–	42	0,1389	26,1		28,3		26,2	
	250	–	54	0,1611	27,5		29,7		27,6	
	280	–	69	0,1876	29,6		31,7		29,3	
	300	–	79	0,2053	30,2		32,4		30,2	
	315	–	86,5	0,2186	31		34,9	JOVENTA DAFx.20S	31	
	355	–	106,5	0,2540	33		36,9		33	
	400	–	129	0,2938	35,3		39,2		35,3	
	450	–	154	0,3381	37,9		41,8		37,8	
	500	–	179	0,3823	40,4		44,3		40,4	
	550	–	204	0,4266	43		46,9		42,9	
	560	–	209	0,4354	43,5		47,4		43,7	BELIMO BEE
	600	–	229	0,4708	45,5		49,4		45,7	
	630	–	244	0,4974	47		50,9		47,3	
	650	9	254	0,5151	48,1		51,9		48,3	
	700	34	279	0,5593	50,6		54,5		52,6	BELIMO BE

A x B [mm]		Damper blade overlaps a [mm]	Damper blade overlaps c [mm]	Free area S_f [m²]	MSD-W Weight [kg]	MSD-W Actuating mechanism	MSD-W with electromagnet Weight [kg]	MSD-W with electromagnet Actuating mechanism	MSD Weight [kg]	MSD Actuating mechanism
900 x	710	39	284	0,5682	51,1	BELIMO BEN	55	JOVENTA DAFx.20S	53,1	BELIMO BE
	750	59	304	0,6036	53,2		57		55,2	
	800	84	329	0,6478	55,7		59,6		57,7	
1000 x	180	–	19	0,1103	25,5	BELIMO BEN	27,6	BELIMO BFN	25,6	BELIMO BEN
	200	–	29	0,1300	26,7		28,9		26,8	
	225	–	42	0,1546	28,3		30,4		28,3	
	250	–	54	0,1793	29,8		31,9		29,9	
	280	–	69	0,2088	32		34,1		31,7	
	300	–	79	0,2285	32,7		36,5	JOVENTA DAFx.20S	32,6	
	315	–	86,5	0,2433	33,5		37,4		33,5	
	355	–	106,5	0,2827	35,7		39,6		35,7	
	400	–	129	0,3270	38,1		42		38,1	
	450	–	154	0,3763	40,9		44,8		40,8	
	500	–	179	0,4255	43,6		47,5		43,6	
	550	–	204	0,4748	46,4		50,2		46,6	BELIMO BEE
	560	–	209	0,4846	46,9		50,8		47,1	
	600	–	229	0,5240	49,1		53		49,3	
	630	–	244	0,5536	50,7		54,6		51	
	650	9	254	0,5733	51,8		55,7		53,9	BELIMO BE
	700	34	279	0,6225	54,6		58,5		56,6	
	710	39	284	0,6324	55,1		59		57,1	
	750	59	304	0,6718	57,3		61,2		59,3	
	800	84	329	0,7210	60		63,9		62,1	
1100 x	180	–	19	0,1215	27,4	BELIMO BEN	29,6	BELIMO BFN	27,5	BELIMO BEN
	200	–	29	0,1432	28,8		30,9		28,9	
	225	–	41,5	0,1703	30,4		32,6		30,5	
	250	–	54	0,1975	32,1		34,2		32,2	
	280	–	69	0,2300	34,4		36,5		34,1	
	300	–	79	0,2517	35,1		39	JOVENTA DAFx.20S	35,1	
	315	–	86,5	0,2680	36		39,9		36	
	355	–	106,5	0,3114	38,3		42,2		38,3	
	400	–	129	0,3602	41		44,8		40,9	
	450	–	154	0,4145	43,9		47,8		43,9	
	500	–	179	0,4687	46,8		50,7		47	BELIMO BEE
	550	–	204	0,5230	49,7		53,6		50	
	560	–	209	0,5338	50,3		54,2		50,5	
	600	–	229	0,5772	52,7		56,6		52,9	
	630	–	244	0,6098	54,4		58,3		56,5	BELIMO BE
	650	9	254	0,6315	55,6		59,5		57,6	
	700	34	279	0,6857	58,5		62,4		60,6	
	710	39	284	0,6966	59,1		63		61,2	
	750	59	304	0,7400	61,5		65,4		63,5	
	800	84	329	0,7942	64,4		68,3		66,4	
1250 x	180	–	19	0,1383	30,3	BELIMO BEN	32,5	BELIMO BFN	30,4	BELIMO BEN
	200	–	29	0,1630	31,8		34		31,9	
	225	–	41,5	0,1939	33,6		35,8		33,7	
	250	–	54	0,2248	35,5		37,6		35,6	
	280	–	69	0,2618	38		41,9	JOVENTA DAFx.20S	37,8	
	300	–	79	0,2865	38,7		42,6		38,7	
	315	–	87	0,3050	39,7		43,6		39,7	
	355	–	106,5	0,3544	42,3		46,2		42,3	
	400	–	129	0,4100	45,2		49,1		45,1	
	450	–	154	0,4718	48,4		52,3		48,4	
	500	–	179	0,5335	51,6		55,5		51,8	BELIMO BEE
	550	–	204	0,5953	54,8		58,7		55	

A x B [mm]		Damper blade overlaps		Free area S_f [m²]	MSD-W		MSD-W with electromagnet		MSD	
		a [mm]	c [mm]		Weight [kg]	Actuating mechanism	Weight [kg]	Actuating mechanism	Weight [kg]	Actuating mechanism
1250 x	560	–	209	0,6076	55,5	BELIMO BEN	59,4	JOVENTA DAFx.20S	55,7	BELIMO BE
	600	–	229	0,6570	58		61,9		60,1	
	630	–	244	0,6941	60		63,9		62	
	650	9	254	0,7188	61,3		65,1		63,3	
	700	34	279	0,7805	64,5		68,4		66,5	
	710	39	284	0,7929	65,1		69		67,2	
	750	59	304	0,8423	67,7		71,6		69,7	
	800	84	329	0,9040	70,9		74,8		72,9	
1400 x	180	–	19	0,1551	33,2	BELIMO BEN	35,4	BELIMO BFN	33,3	BELIMO BEN
	200	–	29	0,1828	34,9		37		34,9	
	225	–	41,5	0,2174	36,9		39		36,9	
	250	–	54	0,2521	38,9		42,6	JOVENTA DAF2.20S	39	
	280	–	69	0,2936	41,7		45,5		41,4	
	300	–	79	0,3213	42,4		46,3		42,3	
	315	–	86,5	0,3421	43,4		47,3		43,4	
	355	–	106,5	0,3975	46,2		50,1		46,2	
	400	–	129	0,4598	49,4		53,3		49,4	
	450	–	154	0,5291	52,9		56,8		53,1	BELIMO BEE
	500	–	179	0,5983	56,4		60,3		56,6	
	550	–	204	0,6676	59,9		63,8		61,9	BELIMO BE
	560	–	209	0,6814	60,6		64,5		62,6	
	600	–	229	0,7368	63,4		67,3		65,4	
	630	–	244	0,7784	65,5		69,4		67,5	
	650	9	254	0,8061	66,9		70,8		68,9	
	700	34	279	0,8753	70,4		74,3		72,5	
	710	39	284	0,8892	71,1		75		73,2	
	750	59	304	0,9446	73,9		77,8		76	
	800	84	329	1,0138	77,4		81,3		87	SCHISCHEK InMax 50.75
1500 x	180	–	19	0,1663	35,2	BELIMO BEN	37,3	BELIMO BFN	35,3	BELIMO BEN
	200	–	29	0,1960	36,9		39		37	
	225	–	42	0,2331	39		41,2		39,1	
	250	–	54	0,2703	41,1		44,9	JOVENTA DAFx.20S	41,2	
	280	–	69	0,3148	44,1		48		43,8	
	300	–	79	0,3445	44,8		48,7		44,8	
	315	–	86,5	0,3668	45,9		49,8		45,9	
	355	–	106,5	0,4262	48,9		52,8		48,9	
	400	–	129	0,4930	52,2		56,1		52,2	
	450	–	154	0,5673	55,9		59,8		56,1	BELIMO BEE
	500	–	179	0,6415	59,6		63,5		59,8	
	550	–	204	0,7158	63,3		67,2		65,3	BELIMO BE
	560	–	209	0,7306	64		67,9		66,1	
	600	–	229	0,7900	67		70,9		69	
	630	–	244	0,8346	69,2		73,1		71,3	
	650	9	254	0,8643	70,7		74,6		72,7	
	700	34	279	0,9385	74,4		78,3		76,4	
	710	39	284	0,9534	75,1		79		77,2	
	750	59	304	1,0128	78,1		82		80,1	
	800	84	329	1,0870	81,8		85,7	JOVENTA DAF2.20S	91,3	SCHISCHEK InMax 50.75

For circular dampers

Nominal size ØD [mm]	Damper blade overlaps f [mm]	Free area Sf [m²]	MSD-W with electromagnet		MSD	
			Weight [kg]	Actuating mechanism	Weight [kg]	Actuating mechanism
180	–	0,0160	11,3	BELIMO BFN	5,9	BELIMO BEN
200	–	0,0208	11,7		6,4	
225	–	0,0277	12,2		7	
250	2,5	0,0356	12,9		7,7	
280	17,5	0,0463	13,6		8,6	
315	35	0,0607	14,6		9,7	
355	55	0,0794	15,8		10,9	
400	77,5	0,1035	15,6	JOVENTA DAFx.20S	12,4	
450	102,5	0,1339	17,3		14,2	
500	127,5	0,1683	19,2		16	
560	157,5	0,2148	21,7		18,3	
630	192,5	0,2762	24,8		21,2	

IV. INSTALLATION

Placement and installation

- Dampers are designed to remove heat and combustion products (e.g. smoke) from fire compartments.
- Dampers are suitable for installation in vertical and horizontal position passages of fire separating constructions. The damper installation procedures must be done so that all load transfer from the fire separating constructions to the damper is absolutely excluded.
- Following air-conditioning duct must be suspended or supported so that all load transfer from the following duct to the damper flange is absolutely excluded.
- The gap between the installed damper and the fire separating construction must be perfectly filled with approved material.
- After installing the damper, the damper blades must only be opened, or closed by operation of the actuator only.
- The distance between the damper and the construction (wall, ceiling) must be 75 mm at the minimum, according to EN 1366-2. If two or more dampers are to be installed in one fire separating construction, the distance between adjacent dampers must be 200 mm at the minimum, according to EN 1366-10.
- To provide the necessary space for access to the control device, it is recommended that other objects be at least 350 mm away from the control parts of the damper device, it is recommended that other objects be at least 350 mm away from the control parts of the damper.

Minimum distance between the dampers and the construction (applies to both circular and rectangular dampers)

- minimum distance 200 mm between dampers, according to EN 1366-10
- minimum distance 75 mm between damper and construction (wall/ceiling), according to EN 1366-10

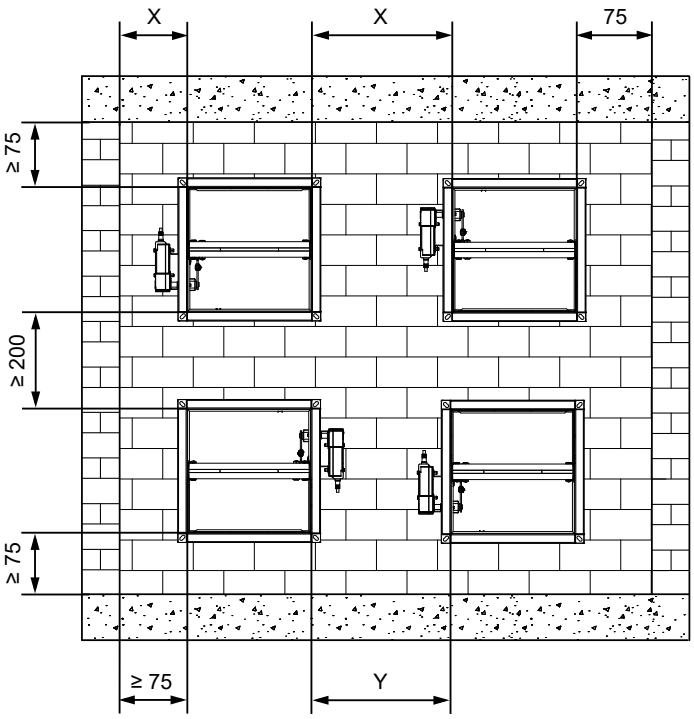

X = recommended minimum distance for a rectangular damper with actuator ≥ 200 mm
X = recommended minimum distance for a rectangular damper with actuator and box ≥ 400 mm
X = recommended minimum distance for a circular damper with actuator ≥ 200 mm

Y = recommended minimum distance for a rectangular damper with actuator ≥ 380 mm
Y = recommended minimum distance for a rectangular damper with actuator and box ≥ 700 mm
Y = recommended minimum distance for a circular damper with actuator ≥ 350 mm

Built in edge

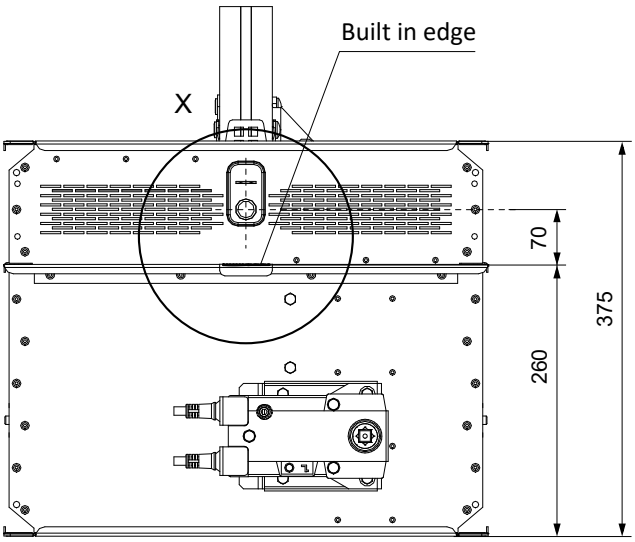

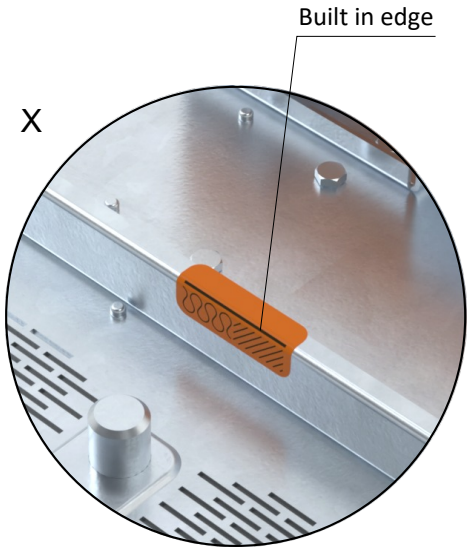

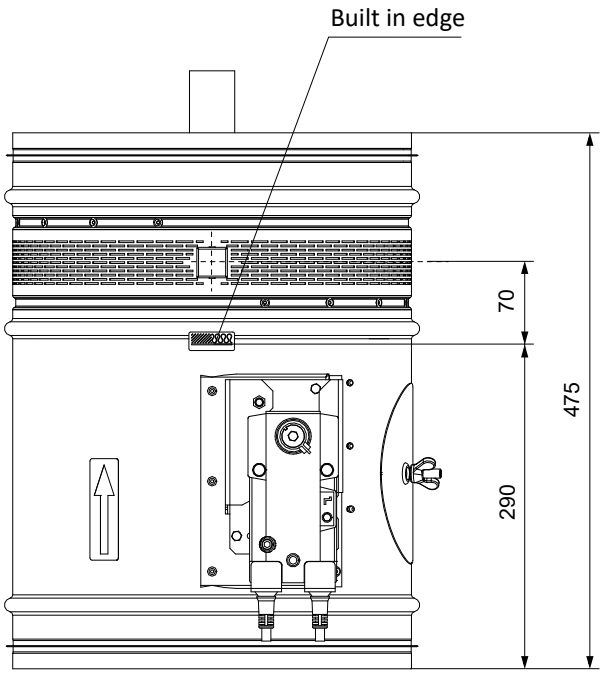

Dimensions of an installation opening

Dimensions of an installation opening - rectangular dampers

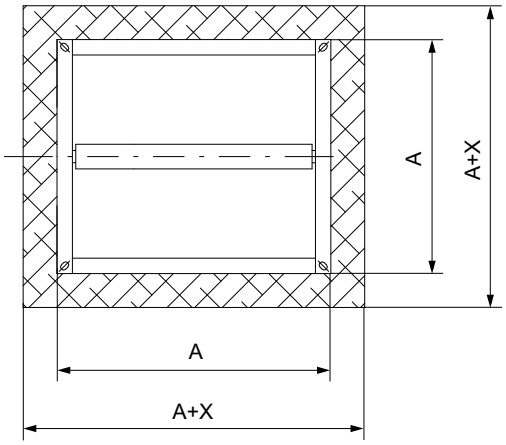

Mortar or gypsum

- X = min. 50 mm
- X = max. 150 mm

Ablative Coated Batt

- X = min. 50 mm
- X = max. 200 mm

Dimensions of an installation opening - circular dampers

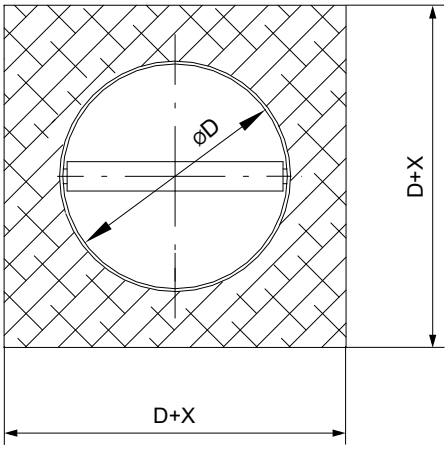

Mortar or gypsum

- X = min. 50 mm
- X = max. 150 mm

Statement of installations

Fire separating construction, location of the damper	Shape of the damper	Damper in section	Installation type, installation system	Gap width [mm]	Classification	Page
Standard low- and high-density rigid wall construction according to EN 1363-1 ● damper in the wall ● 125 mm min. wall thickness	Circular	SINGLE	Mortar or gypsum	50-150	EI 120 (v_{ew}) S1500[H]C_{10000}AAmulti	33
Standard low- and high-density rigid wall construction according to EN 1363-1 ● damper in the wall ● 100 mm min. wall thickness	Rectangular	SINGLE	Mortar or gypsum	50-150	EI 120 (v_{ew}) S1500[H]C_{mod}HOT400/30AAmulti * EI 120 (v_{ew}) S1500[H]C_{10000}AAmulti	34
		MULTI			EI 120 (v_{ew}) S1500[H]C_{mod}HOT400/30AAmulti	35
		SINGLE	Ablative Coated Batt	50-200	EI 120 (v_{ew}) S1500[H]C_{mod}HOT400/30AAmulti * EI 120 (v_{ew}) S1500[H]C_{10000}AAmulti	36
		MULTI			EI 120 (v_{ew}) S1500[H]C_{mod}HOT400/30AAmulti	37
Standard flexible wall construction min. EI 90 according to EN 1363-1 ● damper in the wall ● 125 mm min. wall thickness	Circular	SINGLE	Mortar or gypsum	50-150	EI 120 (v_{ew}) S1500[H]C_{10000}AAmulti	38
Standard flexible wall construction min. EI 90 according to EN 1363-1 ● damper in the wall ● 100 mm min. wall thickness	Rectangular	SINGLE	Mortar or gypsum	50-150	EI 120 (v_{ew}) S1500[H]C_{mod}HOT400/30AAmulti * EI 120 (v_{ew}) S1500[H]C_{10000}AAmulti	39
		MULTI			EI 120 (v_{ew}) S1500[H]C_{mod}HOT400/30AAmulti	40
		SINGLE	Ablative Coated Batt	50-200	EI 120 (v_{ew}) S1500[H]C_{mod}HOT400/30AAmulti * EI 120 (v_{ew}) S1500[H]C_{10000}AAmulti	41
		MULTI			EI 120 (v_{ew}) S1500[H]C_{mod}HOT400/30AAmulti	42
Standard low- and high-density rigid floor construction according to EN 1366-2 ● damper in the ceiling ● 150 mm min. ceiling thickness	Circular	SINGLE	Mortar or gypsum	50-150	EI 120 (h_{ow}) S1500[H]C_{10000}AAmulti	43
	Rectangular	SINGLE			EI 120 (h_{ow}) S1500[H]C_{mod}HOT400/30AAmulti * EI 120 (h_{ow}) S1500[H]C_{10000}AAmulti	44
		MULTI			EI 120 (h_{ow}) S1500[H]C_{mod}HOT400/30AAmulti	45
		SINGLE	Ablative Coated Batt	50-200	EI 90 (h_{ow}) S1500[H]C_{mod}HOT400/30AAmulti E 120 (h_{ow}) S1500[H]C_{mod}HOT400/30AAmulti * EI 120 (h_{ow}) S1500[H]C_{10000}AAmulti	46
		MULTI			EI 90 (h_{ow}) S1500[H]C_{mod}HOT400/30AAmulti E 120 (h_{ow}) S1500[H]C_{mod}HOT400/30AAmulti	47
Horizontal or vertical smoke extraction ducts tested according to EN 1366-8 or EN 1366-9 ● Into or onto the duct	Rectangular	MULTI	Damper installed Into or onto a duct	N/A	EI 120 (v_{ed}) S1500[H]C_{mod}HOT400/30AAmulti EI 120 (h_{od}) S1500[H]C_{mod}HOT400/30AAmulti	48-49

* *Applies to MSD-W damper*

In solid wall construction

In solid wall construction - mortar or gypsum
- damper placement in a single section

EI 120 (v_{ew}) S1500[H]C_{10000}AAmulti

- Standard low- and high-density rigid wall construction according to EN 1363-1
- For connection of following duct → see page 52

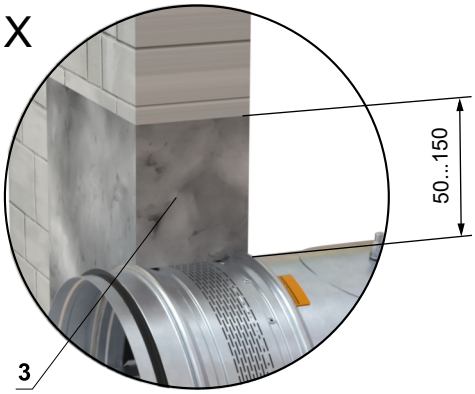

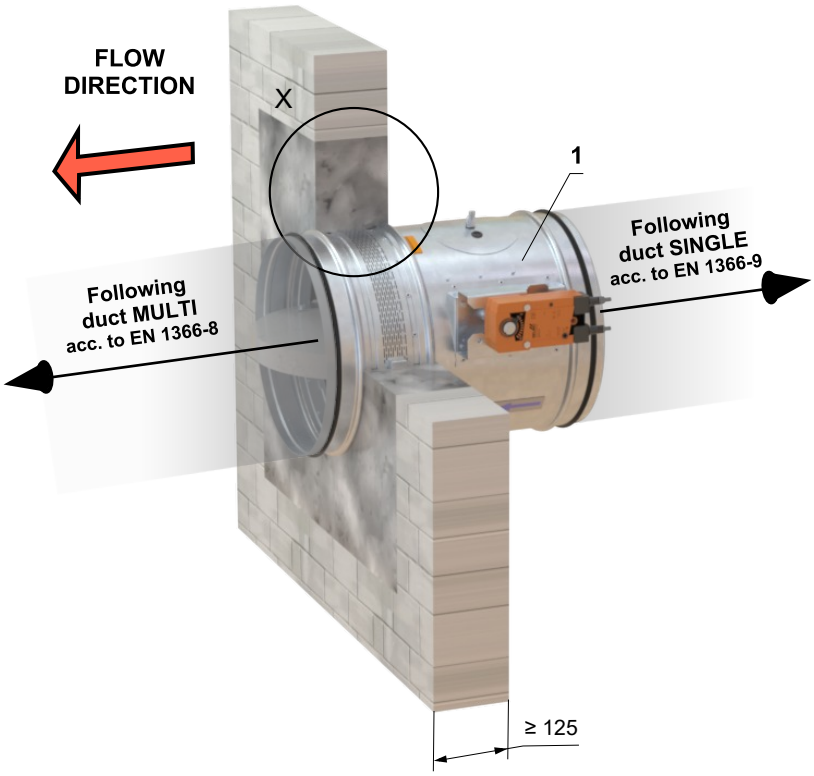

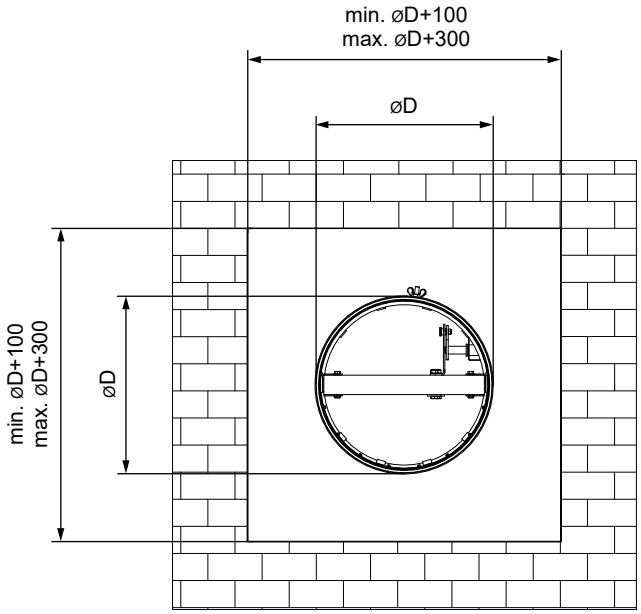

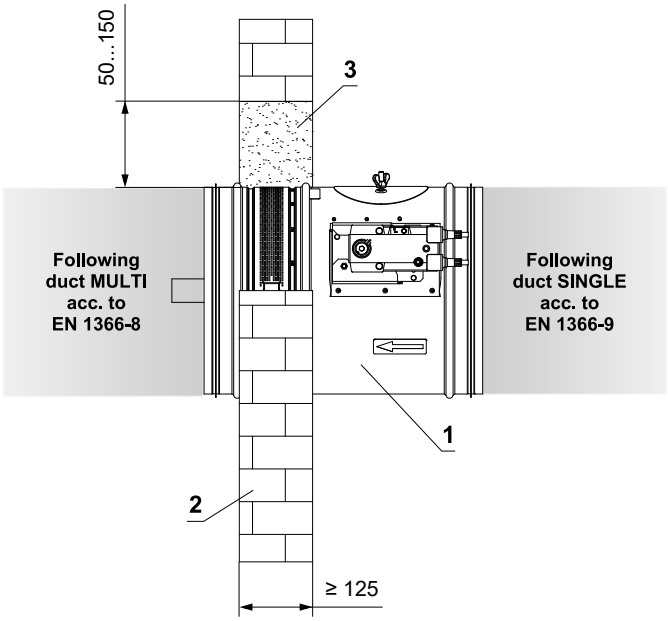

1 MSD-W / MSD - design „A“
2 Solid wall construction
3 Mortar or gypsum

In solid wall construction - mortar or gypsum
- damper placement in a single section

EI 120 (v_{ew}) S1500[H]C_{mod}HOT400/30AAmulti
*** EI 120 (v_{ew}) S1500[H]C_{10000}AAmulti**

** Applies to MSD-W damper*

- Standard low- and high-density rigid wall construction according to EN 1363-1
- For connection of following duct → see page 52

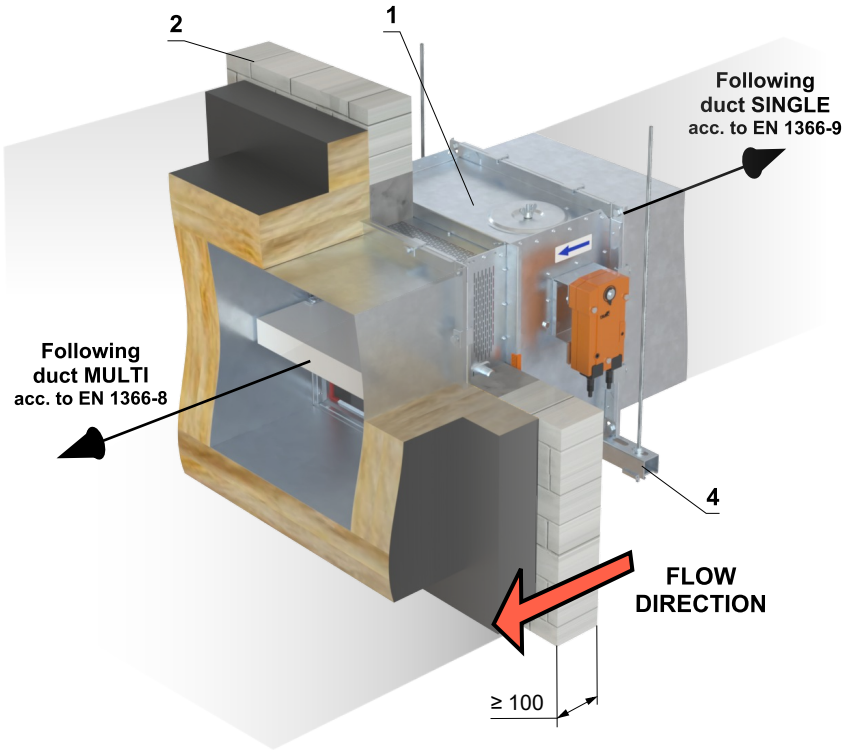

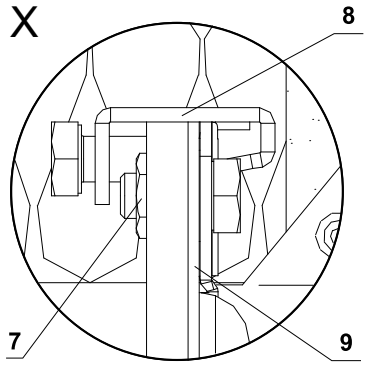

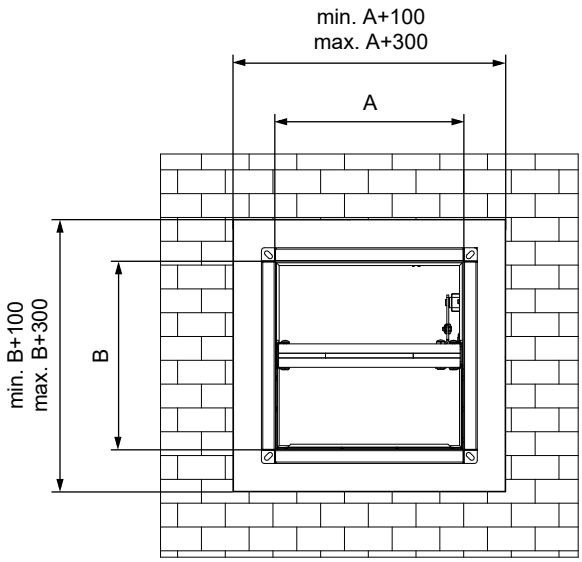

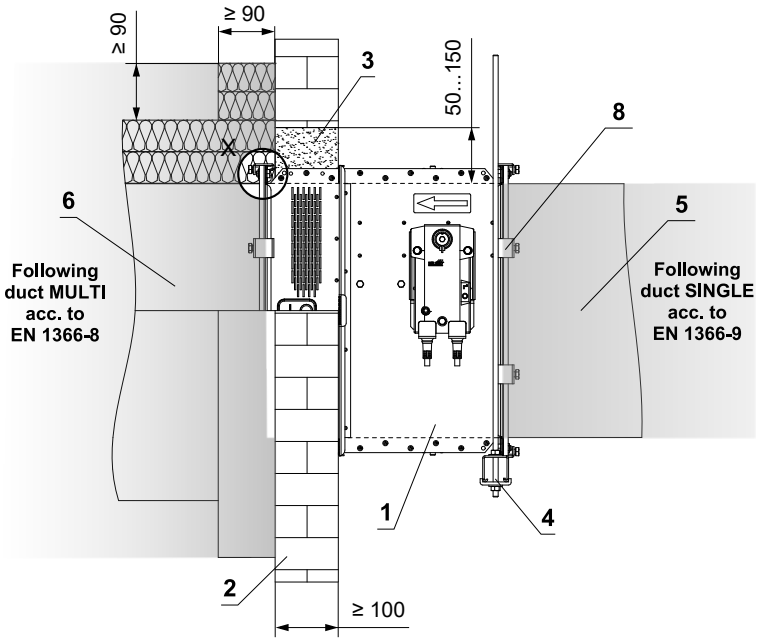

1 MSD-W / MSD - design „A“
2 Solid wall construction
3 Mortar or gypsum
4 Suspension system (type according to duct manufacturer instructions) → see page 51
5 SINGLE duct made of sheet metal, thickness min. 1 mm, acc. to EN 1366-9
6 MULTI duct made of sheet metal acc. to EN 1366-8 → see page 48
7 Flange connection at corners - M10 bolt, washers and nut
8 M8 C-clamps - maximum spacing of C-clamps 200 mm (type according to duct manufacturer instructions)
9 Ceramic selfadhesive sealing tape - arround the duct circumference (type according to duct manufacturer instructions)

In solid wall construction - mortar or gypsum
- damper placement in a multi section

EI 120 (v_{ew}) S1500[H]C_{mod}HOT400/30AAmulti

- Standard low- and high-density rigid wall construction according to EN 1363-1
- For connection of following duct → see page 52

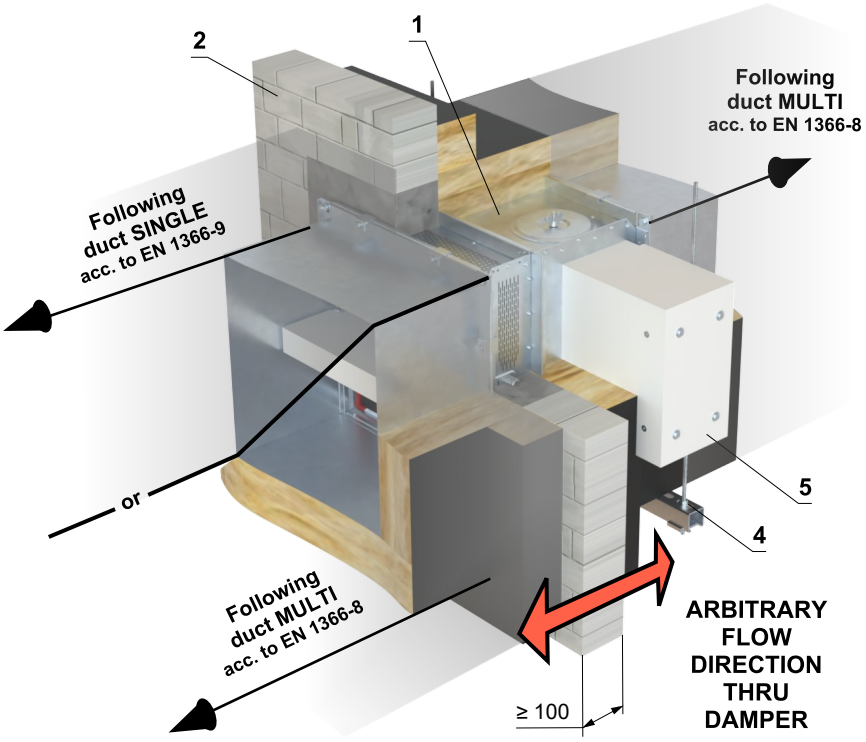

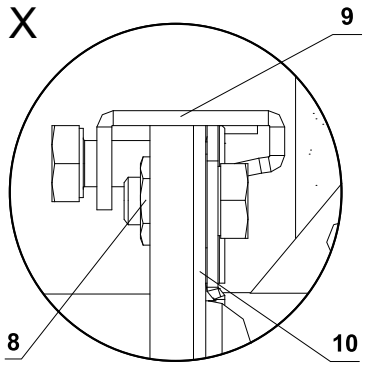

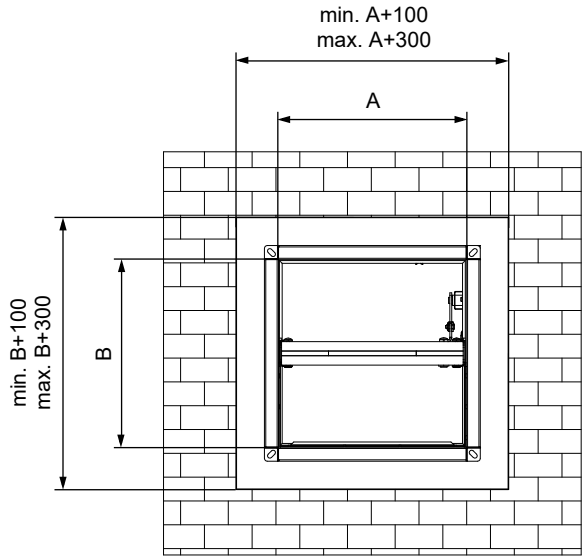

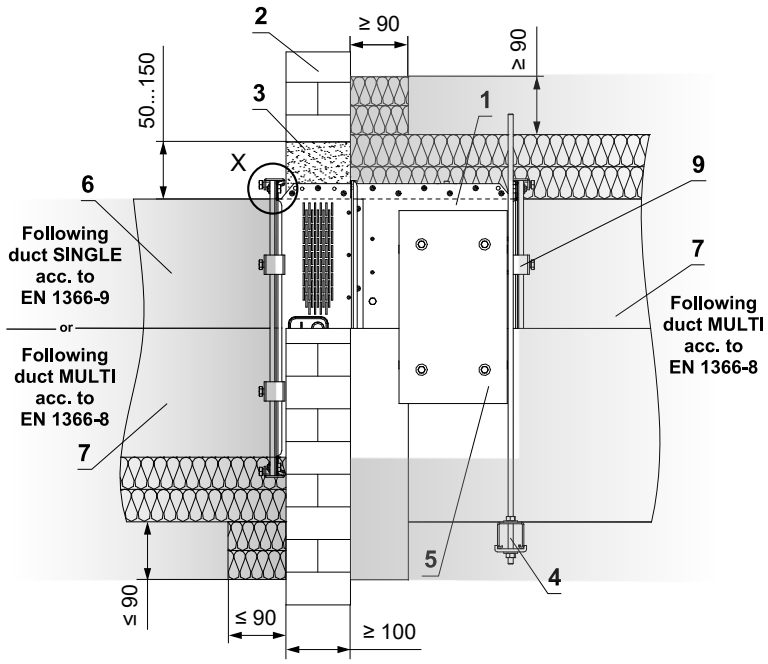

1 MSD - design „IB“
2 Solid wall construction
3 Mortar or gypsum
4 Suspension system (type according to duct manufacturer instructions) → see page 51
5 Actuator cover - must be removable after installation of the damper
6 SINGLE duct made of sheet metal, thickness min. 1 mm, acc. to EN 1366-9
7 MULTI duct made of sheet metal acc. to EN 1366-8 → see page 48
8 Flange connection at corners - M10 bolt, washers and nut
9 M8 C-clamps - maximum spacing of C-clamps 200 mm (type according to duct manufacturer instructions)
10 Ceramic selfadhesive sealing tape - arround the duct circumference (type according to duct manufacturer instructions)

In solid wall construction - Ablative Coated Batt
- damper placement in a single section

EI 120 (v_{ew}) S1500[H]C_{mod}HOT400/30AAmulti
*** EI 120 (v_{ew}) S1500[H]C_{10000}AAmulti**

** Applies to MSD-W damper*

- Standard low- and high-density rigid wall construction according to EN 1363-1
- For connection of following duct → see page 52

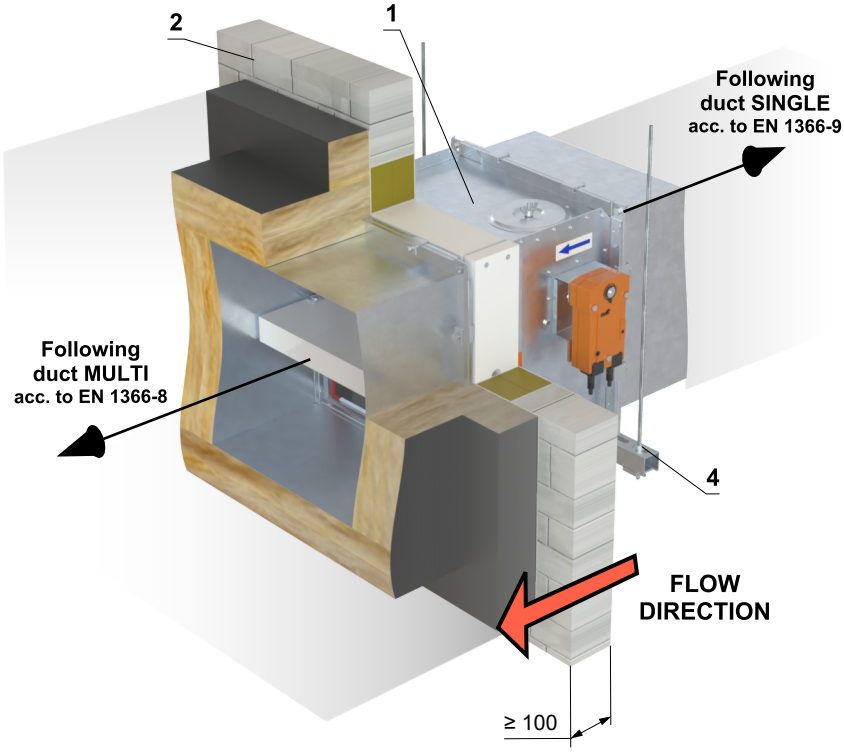

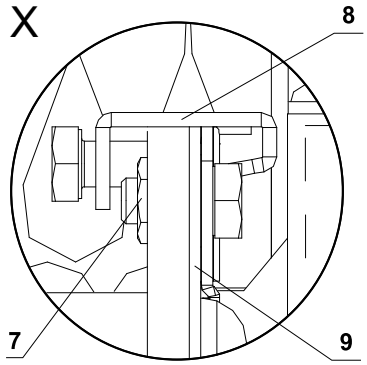

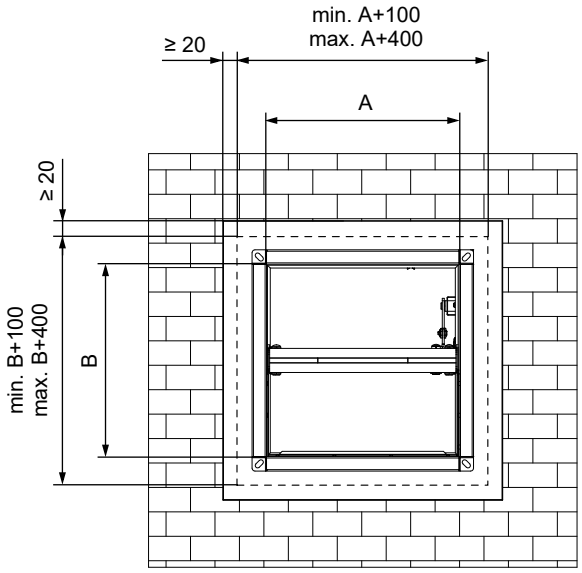

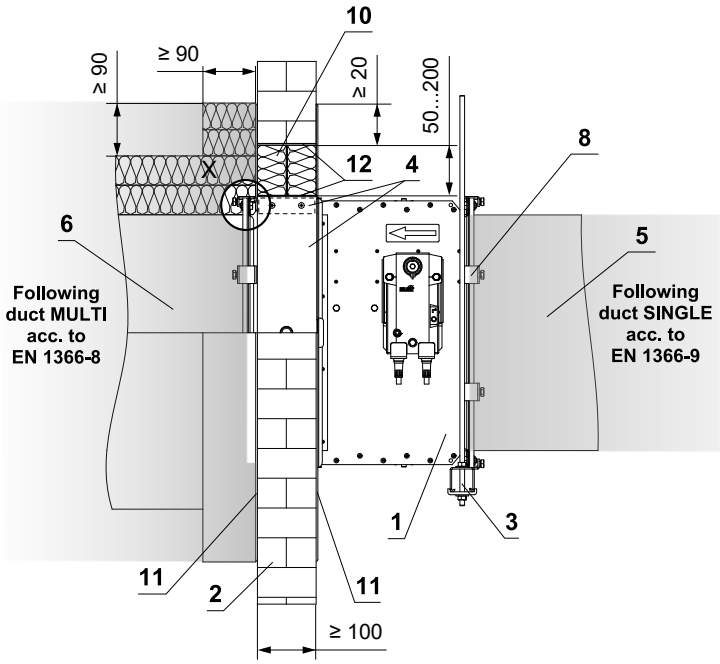

1 MSD-W / MSD - design „A1“
2 Solid wall construction
3 Suspension system (type according to duct manufacturer instructions) → see page 51
4 Protective cladding board - min. th. 30 mm, min. density 750 kg/m³ (e.g. PROMATECT-MST) → see page 59
5 SINGLE duct made of sheet metal, thickness min. 1 mm, acc. to EN 1366-9
6 MULTI duct made of sheet metal acc. to EN 1366-8 → see page 48
7 Flange connection at corners - M10 bolt, washers and nut
8 M8 C-clamps - maximum spacing of C-clamps 200 mm (type according to duct manufacturer instructions)
9 Ceramic selfadhesive sealing tape - arround the duct circumference (type according to duct manufacturer instructions)
Ablative Coated Batt System HILTI*
10 Mineral wool board - min. density 140 kg/m³ (HILTI CFS-CT B 1S 140/50...)
11 Fire stop coating - th. 1 mm (HILTI CFS-CT...) - coating is overcoated on the support construction and on the damper casing/duct.
12 Fire-resistant mastic - (HILTI CFS-S ACR...) fill the gap from both sides of the fire separation construction and around the perimeter of penetration and damper casing.

* HILTI system can be replaced by a similar system with the same or higher thickness, density, fire reaction class, tested according to EN 1366-3.

In solid wall construction - Ablative Coated Batt
- damper placement in a multi section

EI 120 (v_{ew}) S1500[H]C_{mod}HOT400/30AAmulti

- Standard low- and high-density rigid wall construction according to EN 1363-1
- For connection of following duct → see page 52

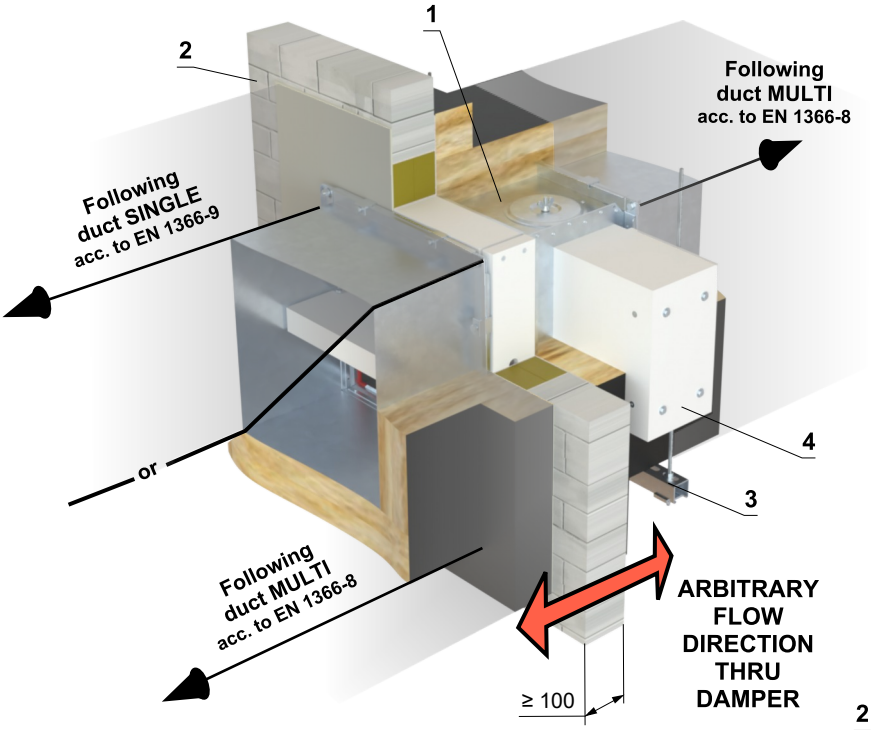

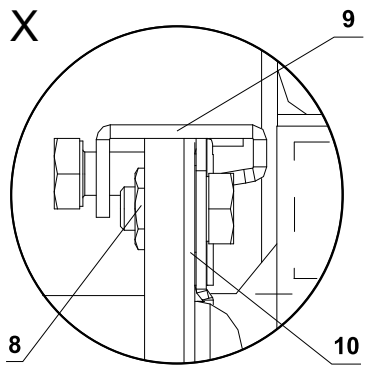

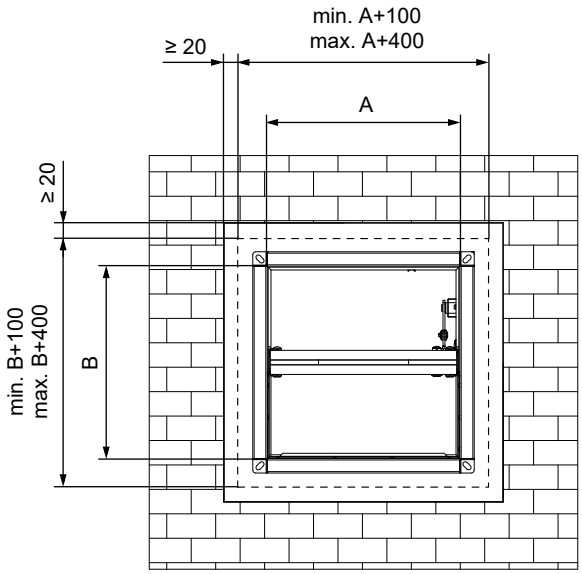

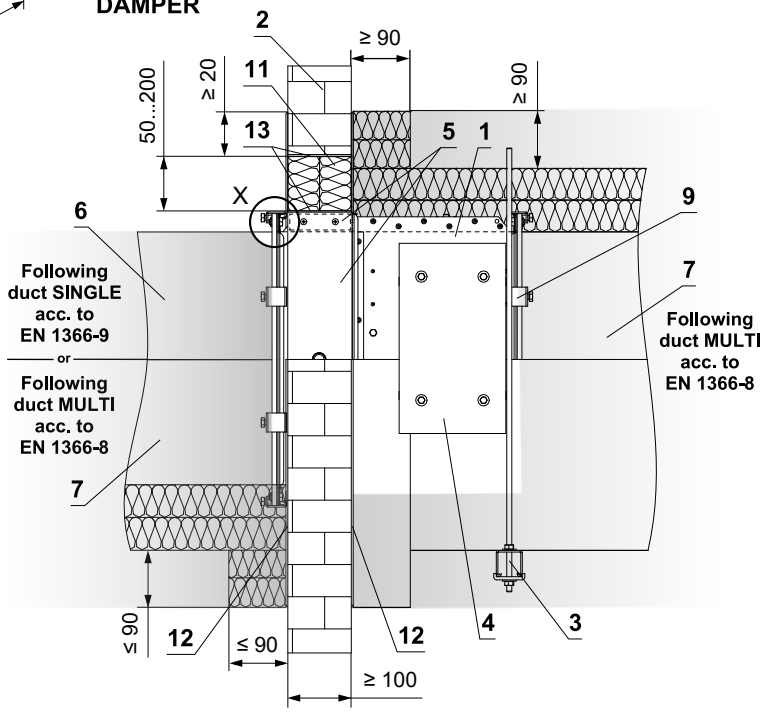

1 MSD - design „IB1“
2 Solid wall construction
3 Suspension system (type according to duct manufacturer instructions) → see page 51
4 Actuator cover - must be removable after installation of the damper
5 Protective cladding board - min. th. 30 mm, min. density 750 kg/m³ (e.g. PROMATECT-MST) → see page 59
6 SINGLE duct made of sheet metal, thickness min. 1 mm, acc. to EN 1366-9
7 MULTI duct made of sheet metal acc. to EN 1366-8 → see page 48
8 Flange connection at corners - M10 bolt, washers and nut
9 M8 C-clamps - maximum spacing of C-clamps 200 mm (type according to duct manufacturer instructions)
10 Ceramic selfadhesive sealing tape - arround the duct circumference (type according to duct manufacturer instructions)
Ablative Coated Batt System HILTI*
11 Mineral wool board - min. density 140 kg/m³ (HILTI CFS-CT B 1S 140/50...)
12 Fire stop coating - th. 1 mm (HILTI CFS-CT...) - coating is overcoated on the support construction and on the damper casing/duct.
13 Fire-resistant mastic - (HILTI CFS-S ACR...) fill the gap from both sides of the fire separation construction and around the perimeter of penetration and damper casing.

* HILTI system can be replaced by a similar system with the same or higher thickness, density, fire reaction class, tested according to EN 1366-3.

In gypsum wall construction

In gypsum wall construction min. EI 90 - mortar or gypsum
- damper placement in a single section

EI 120 (v_{ew}) S1500[H]C_{10000}AAmulti

- Standard flexible wall construction min. EI 90 according to EN 1363-1.
- For connection of following duct → see page 52
- The installation opening is lined with a UW/CW profile.

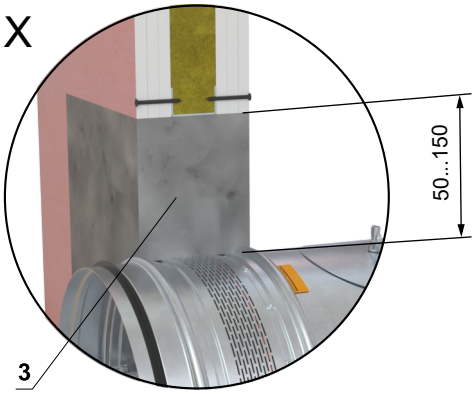

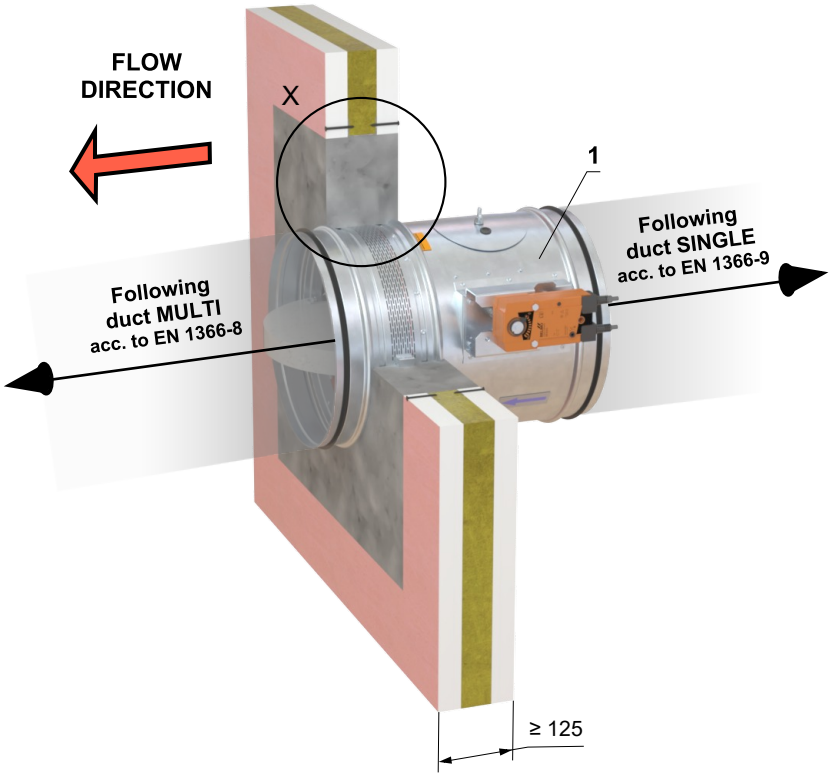

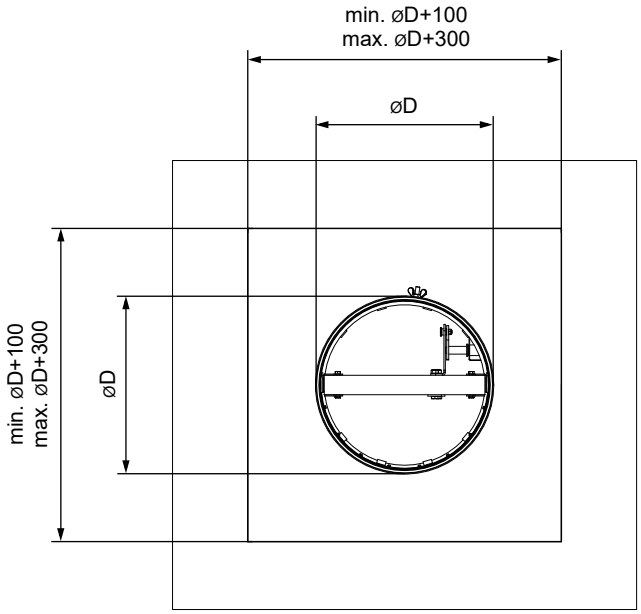

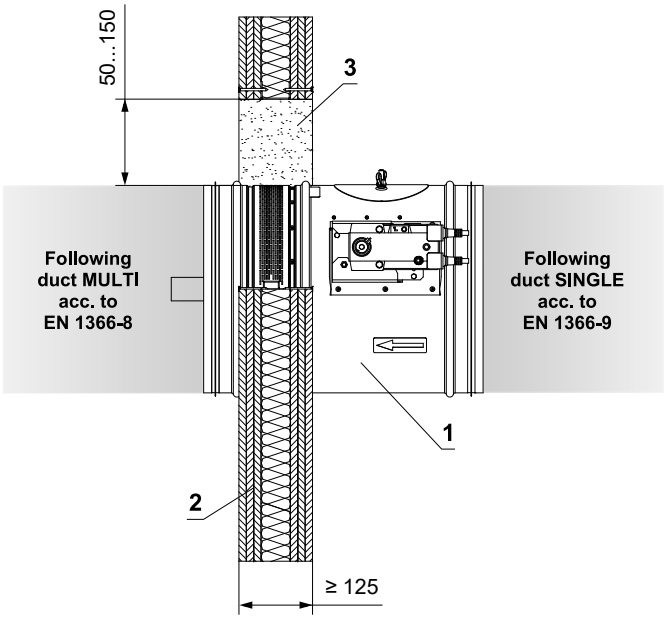

1 MSD-W / MSD - design „A“
2 Gypsum wall construction
3 Mortar or gypsum

In gypsum wall construction min. EI 90 - mortar or gypsum - damper placement in a single section

EI 120 (v_{ew}) S1500[H]C_{mod}HOT400/30AAmulti
*** EI 120 (v_{ew}) S1500[H]C_{10000}AAmulti**

** Applies to MSD-W damper*

- Standard flexible wall construction min. EI 90 according to EN 1363-1.
- For connection of following duct → see page 52
- The installation opening is lined with a UW/CW profile.

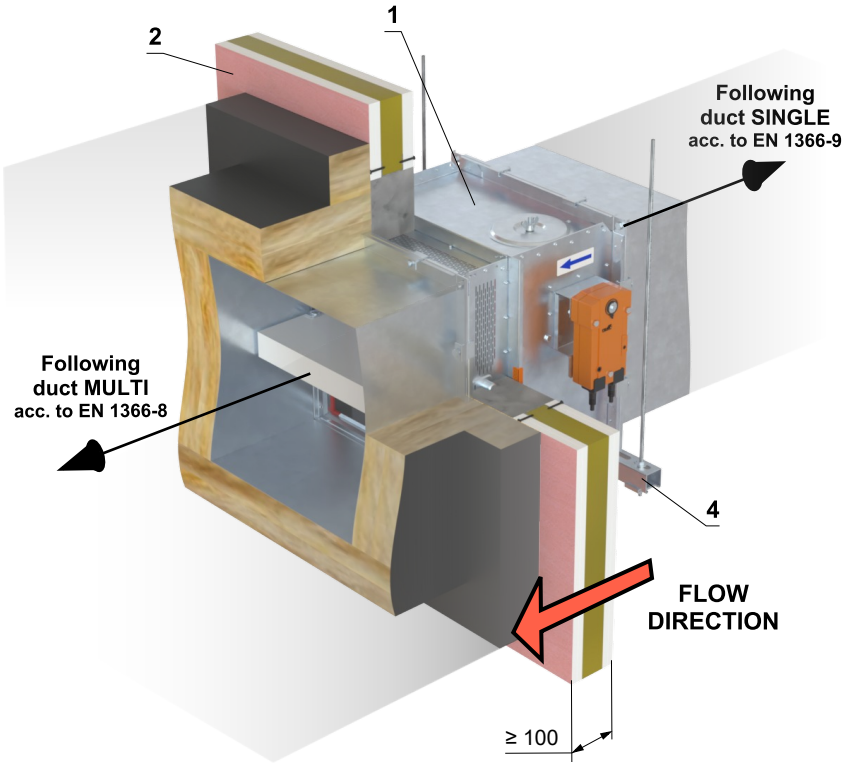

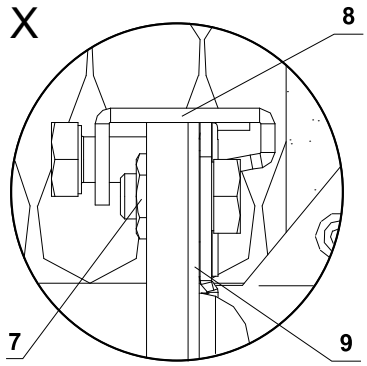

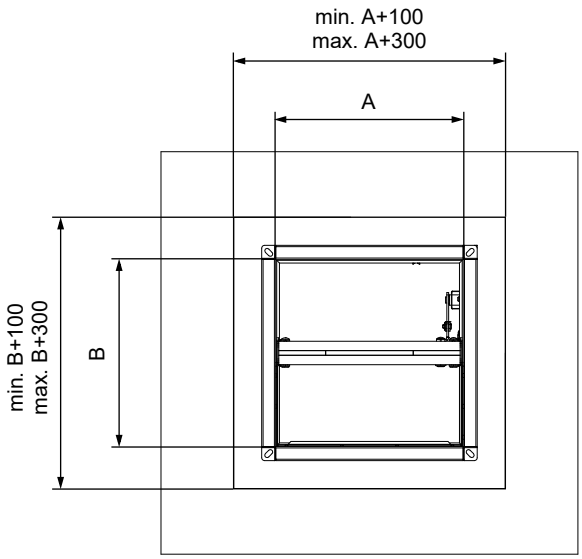

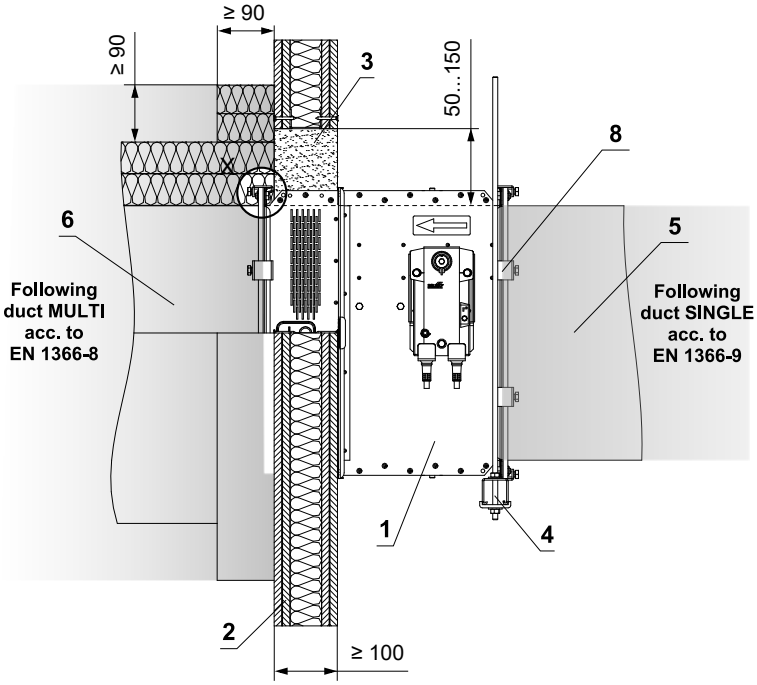

1 MSD-W / MSD - design „A“
2 Gypsum wall construction
3 Mortar or gypsum
4 Suspension system (type according to duct manufacturer instructions) → see page 51
5 SINGLE duct made of sheet metal, thickness min. 1 mm, acc. to EN 1366-9
6 MULTI duct made of sheet metal acc. to EN 1366-8 → see page 48
7 Flange connection at corners - M10 bolt, washers and nut
8 M8 C-clamps - maximum spacing of C-clamps 200 mm (type according to duct manufacturer instructions)
9 Ceramic selfadhesive sealing tape - arround the duct circumference (type according to duct manufacturer instructions)

In gypsum wall construction min. EI 90 - mortar or gypsum - damper placement in a multi section

EI 120 (v_{ew}) S1500[H]C_{mod}HOT400/30AAmulti

- Standard flexible wall construction min. EI 90 according to EN 1363-1.
- For connection of following duct → see page 52
- The installation opening is lined with a UW/CW profile.

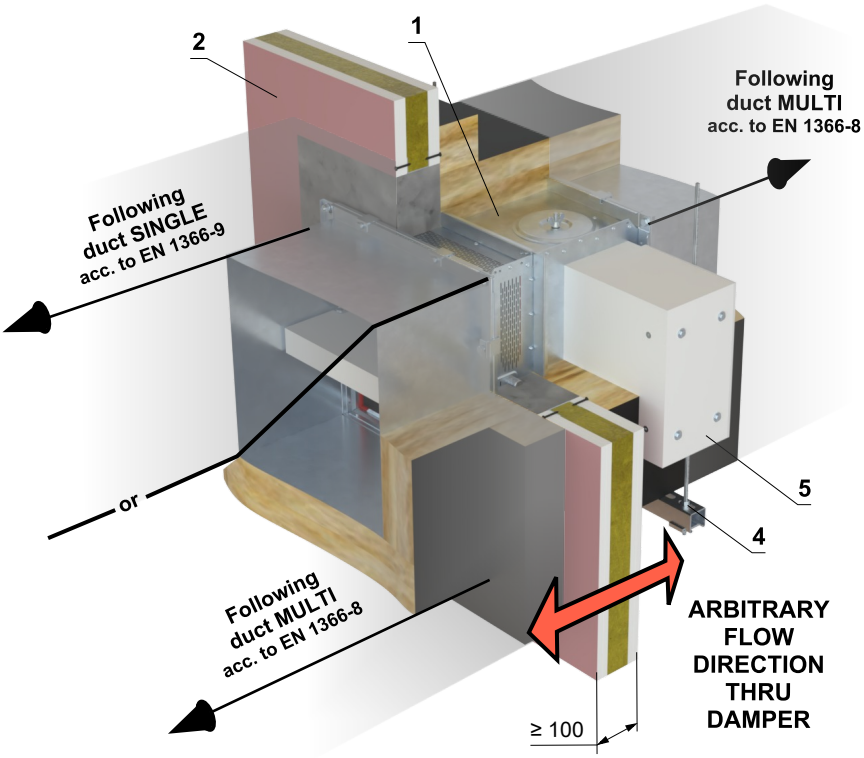

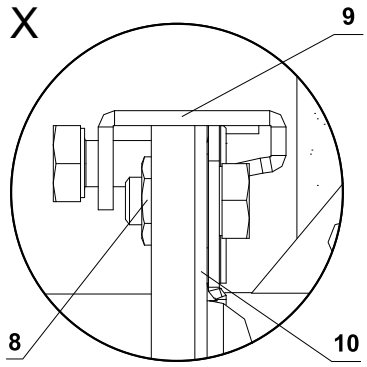

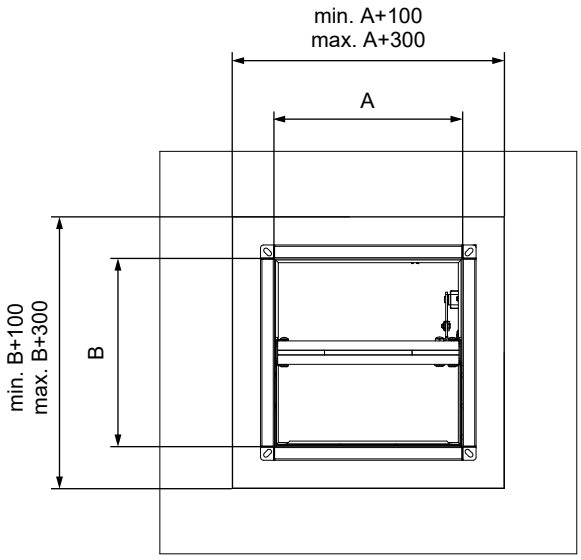

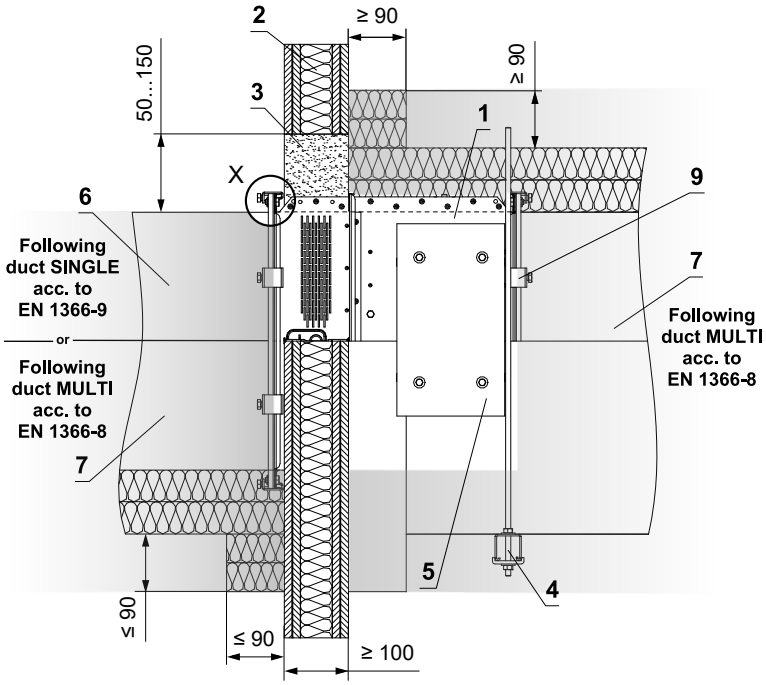

1 MSD - design „IB“
2 Gypsum wall construction
3 Mortar or gypsum
4 Suspension system (type according to duct manufacturer instructions) → see page 51
5 Actuator cover - must be removable after installation of the damper
6 SINGLE duct made of sheet metal, thickness min. 1 mm, acc. to EN 1366-9
7 MULTI duct made of sheet metal acc. to EN 1366-8 → see page 48
8 Flange connection at corners - M10 bolt, washers and nut
9 M8 C-clamps - maximum spacing of C-clamps 200 mm (type according to duct manufacturer instructions)
10 Ceramic selfadhesive sealing tape - arround the duct circumference (type according to duct manufacturer instructions)

In gypsum wall construction min. EI 90 - Ablative Coated Batt - damper placement in a single section

EI 120 (v_{ew}) S1500[H]C_{mod}HOT400/30AAmulti
*** EI 120 (v_{ew}) S1500[H]C_{10000}AAmulti**

** Applies to MSD-W damper*

- Standard flexible wall construction min. EI 90 according to EN 1363-1.
- For connection of following duct → see page 52
- The installation opening is lined with a UW/CW profile.

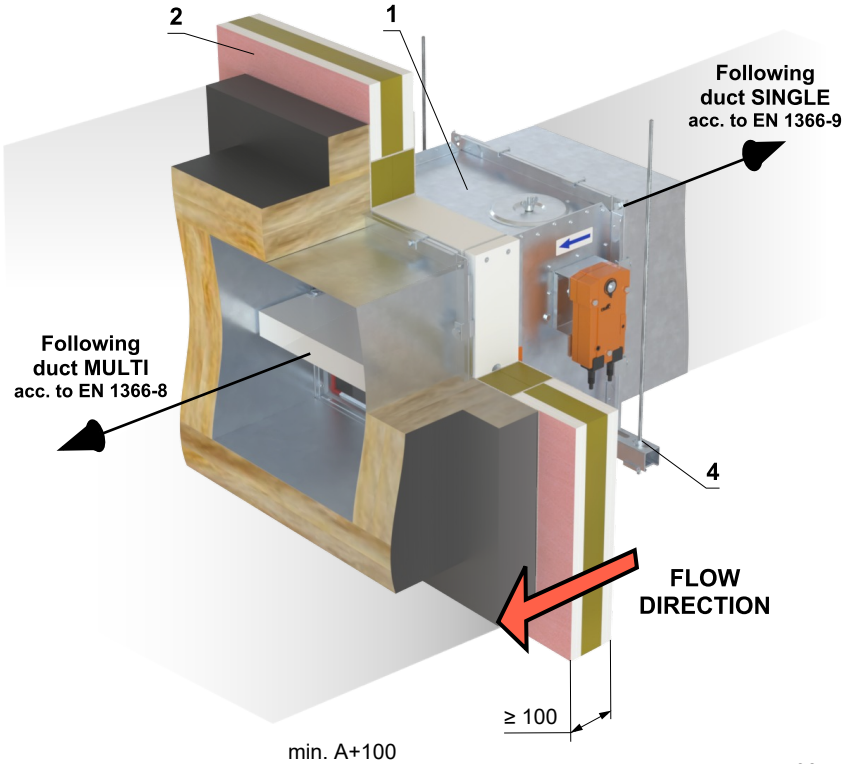

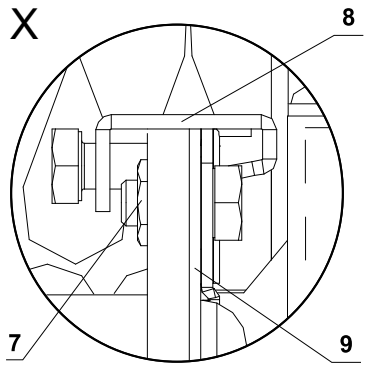

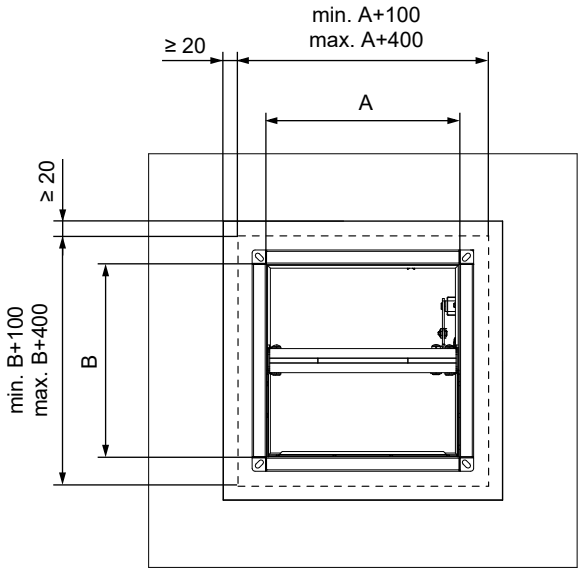

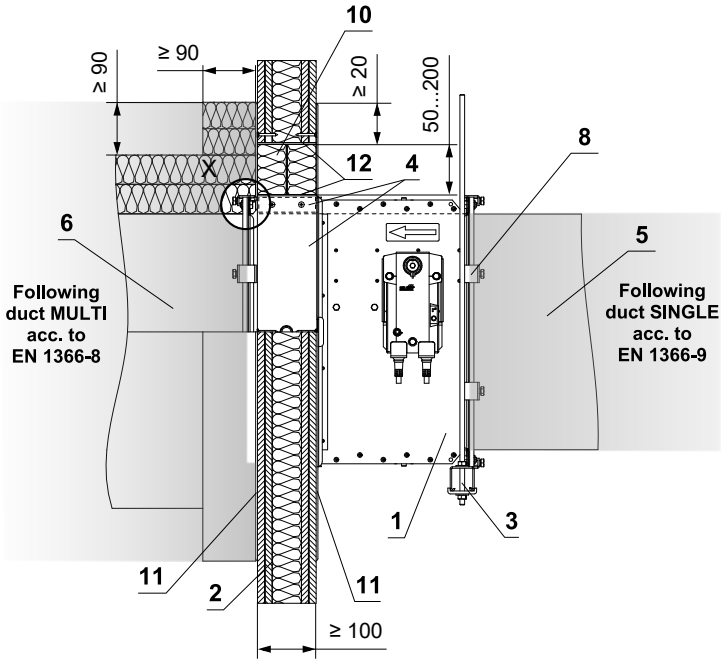

1 MSD-W / MSD - design „A1“
2 Gypsum wall construction
3 Suspension system (type according to duct manufacturer instructions) → see page 51
4 Protective cladding board - min. th. 30 mm, min. density 750 kg/m³ (e.g. PROMATECT-MST) → see page 59
5 SINGLE duct made of sheet metal, thickness min. 1 mm, acc. to EN 1366-9
6 MULTI duct made of sheet metal acc. to EN 1366-8 → see page 48
7 Flange connection at corners - M10 bolt, washers and nut
8 M8 C-clamps - maximum spacing of C-clamps 200 mm (type according to duct manufacturer instructions)
9 Ceramic selfadhesive sealing tape - arround the duct circumference (type according to duct manufacturer instructions)
Ablative Coated Batt System HILTI*
10 Mineral wool board - min. density 140 kg/m³ (HILTI CFS-CT B 1S 140/50...)
11 Fire stop coating - th. 1 mm (HILTI CFS-CT...) - coating is overcoated on the support construction and on the damper casing/duct.
12 Fire-resistant mastic - (HILTI CFS-S ACR...) fill the gap from both sides of the fire separation construction and around the perimeter of penetration and damper casing.

* HILTI system can be replaced by a similar system with the same or higher thickness, density, fire reaction class, tested according to EN 1366-3.

In gypsum wall construction min. EI 90 - Ablative Coated Batt - damper placement in a multi section

EI 120 (v_{ew}) S1500[H]C_{mod}HOT400/30AAmulti

- Standard flexible wall construction min. EI 90 according to EN 1363-1.
- For connection of following duct → see page 52
- The installation opening is lined with a UW/CW profile.

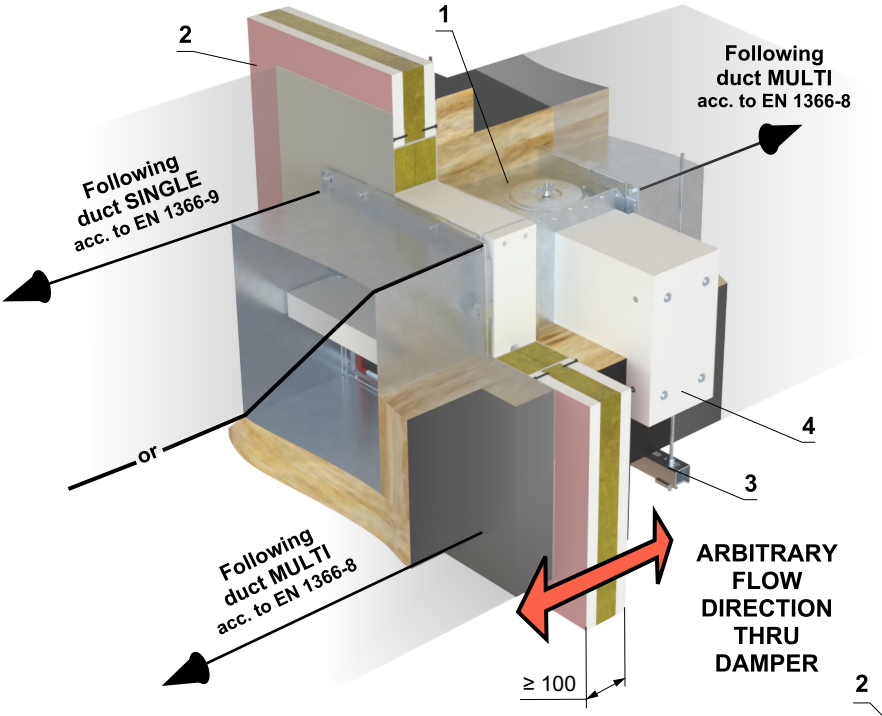

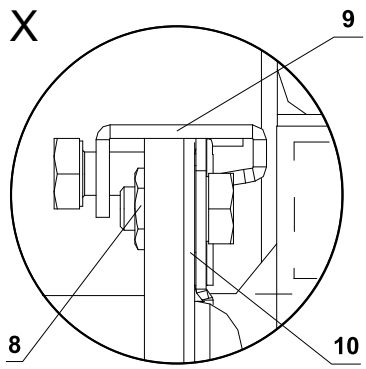

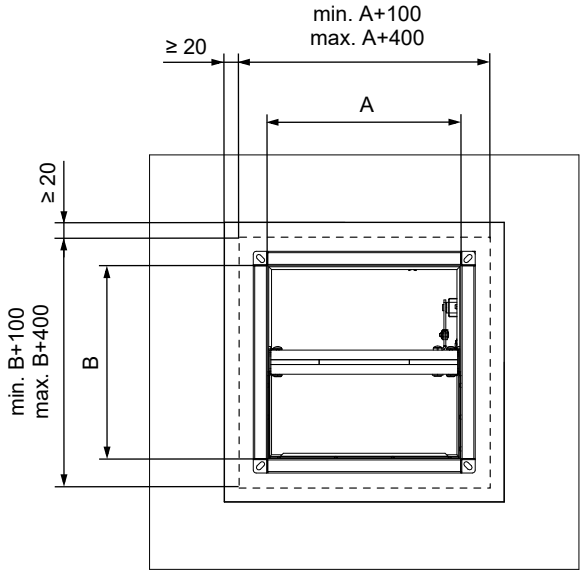

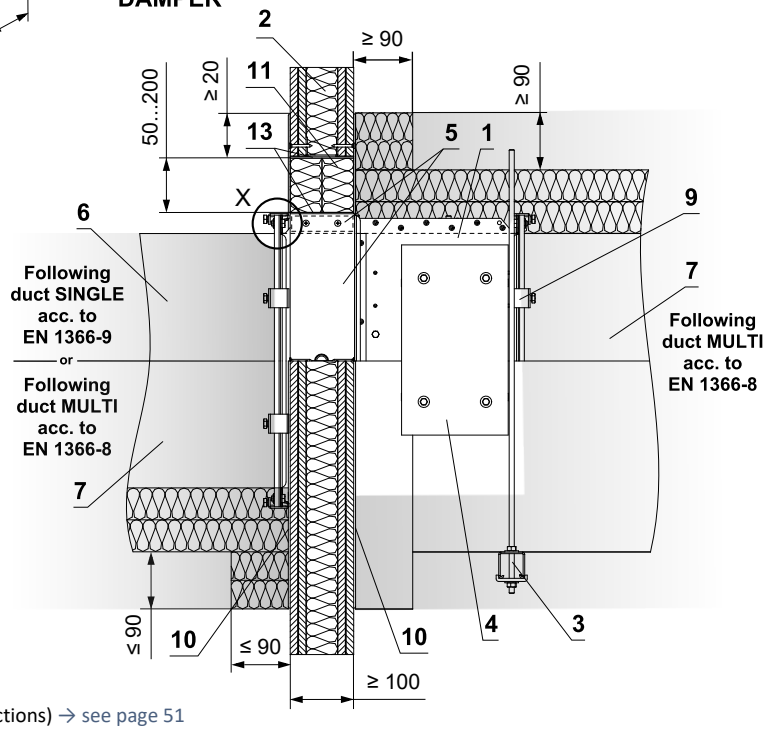

1 MSD - design „IB1“
2 Gypsum wall construction
3 Suspension system (type according to duct manufacturer instructions) → see page 51
4 Actuator cover - must be removable after installation of the damper
5 Protective cladding board - min. th. 30 mm, min. density 750 kg/m³ (e.g. PROMATECT-MST) → see page 59
6 SINGLE duct made of sheet metal, thickness min. 1 mm, acc. to EN 1366-9
7 MULTI duct made of sheet metal acc. to EN 1366-8 → see page 48
8 Flange connection at corners - M10 bolt, washers and nut
9 M8 C-clamps - maximum spacing of C-clamps 200 mm (type according to duct manufacturer instructions)
10 Ceramic selfadhesive sealing tape - arround the duct circumference (type according to duct manufacturer instructions)
Ablative Coated Batt System HILTI*
11 Mineral wool board - min. density 140 kg/m³ (HILTI CFS-CT B 1S 140/50...)
12 Fire stop coating - th. 1 mm (HILTI CFS-CT...) - coating is overcoated on the support construction and on the damper casing/duct.
13 Fire-resistant mastic - (HILTI CFS-S ACR...) fill the gap from both sides of the fire separation construction and around the perimeter of penetration and damper casing.

* HILTI system can be replaced by a similar system with the same or higher thickness, density, fire reaction class, tested according to EN 1366-3.

In solid ceiling construction

In solid ceiling construction - mortar or gypsum
- damper placement in a single section

EI 120 (h_{ow}) S1500[H]C_{10000}AAmulti

- Standard low- and high-density rigid floor construction according to EN 1366-2
- For connection of following duct → see page 52
- The damper can be installed from both sides of the construction, i.e. from the top or the bottom side of the ceiling

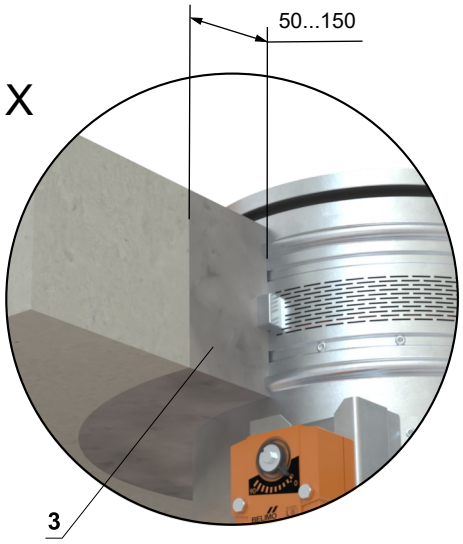

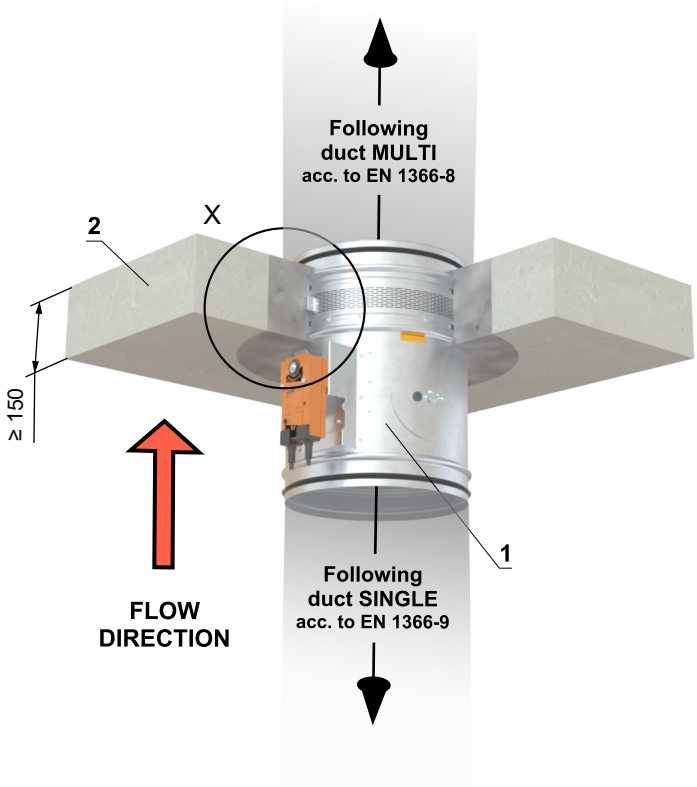

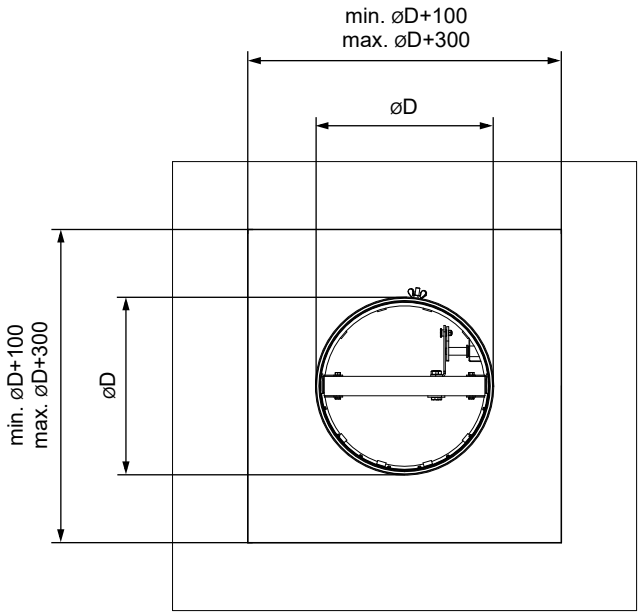

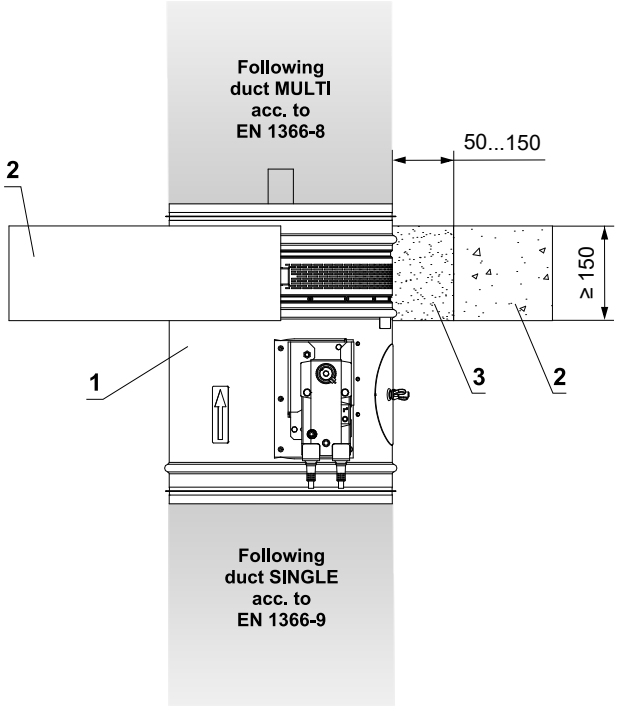

1 MSD-W / MSD - design „A“
2 Solid ceiling construction
3 Mortar or gypsum

In solid ceiling construction - mortar or gypsum
- damper placement in a single section

EI 120 (h_{ow}) S1500[H]C_{mod}HOT400/30AAmulti
*** EI 120 (h_{ow}) S1500[H]C_{10000}AAmulti**

** Applies to MSD-W damper*

- Standard low- and high-density rigid floor construction according to EN 1366-2
- For connection of following duct → see page 52
- The damper can be installed from both sides of the construction, i.e. from the top or the bottom side of the ceiling

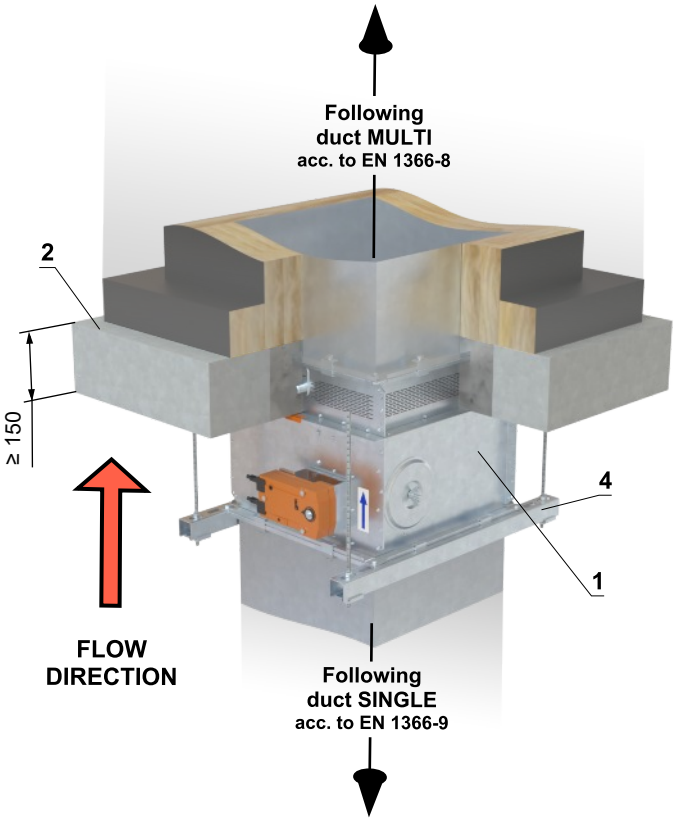

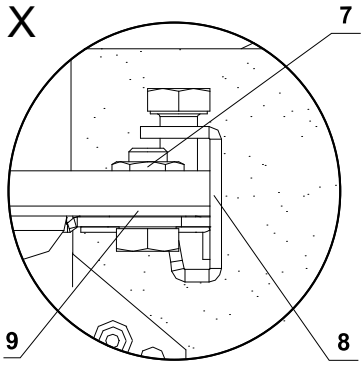

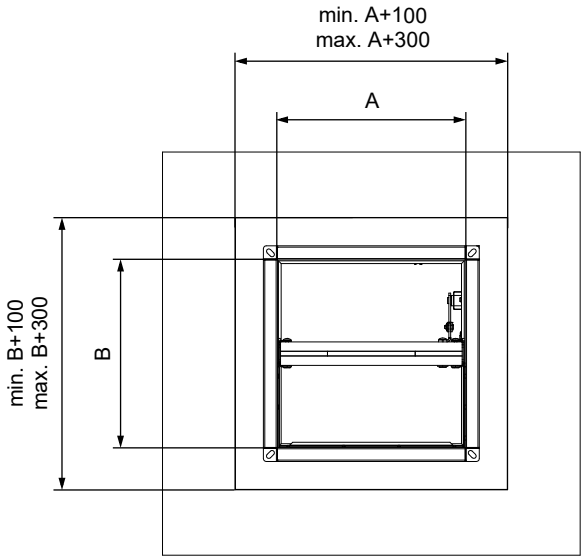

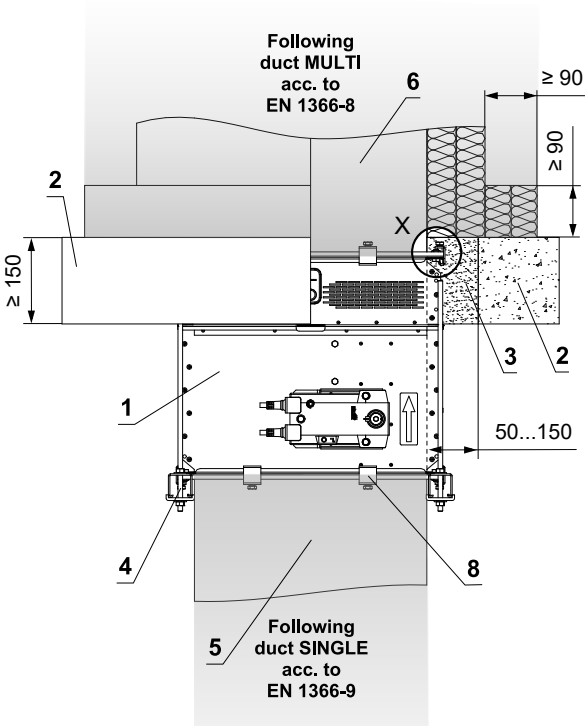

1 MSD-W / MSD - design „A“
2 Solid ceiling construction
3 Mortar or gypsum
4 Suspension system (type according to duct manufacturer instructions) → see page 51
5 SINGLE duct made of sheet metal, thickness min. 1 mm, acc. to EN 1366-9
6 MULTI duct made of sheet metal acc. to EN 1366-8 → see page 48
7 Flange connection at corners - M10 bolt, washers and nut
8 M8 C-clamps - maximum spacing of C-clamps 200 mm (type according to duct manufacturer instructions)
9 Ceramic selfadhesive sealing tape - arround the duct circumference (type according to duct manufacturer instructions)

In solid ceiling construction - mortar or gypsum
- damper placement in a multi section

EI 120 (h_{ow}) S1500[H]C_{mod}HOT400/30AAmulti

- Standard low- and high-density rigid floor construction according to EN 1366-2
- For connection of following duct → see page 52
- The damper can be installed from both sides of the construction, i.e. from the top or the bottom side of the ceiling

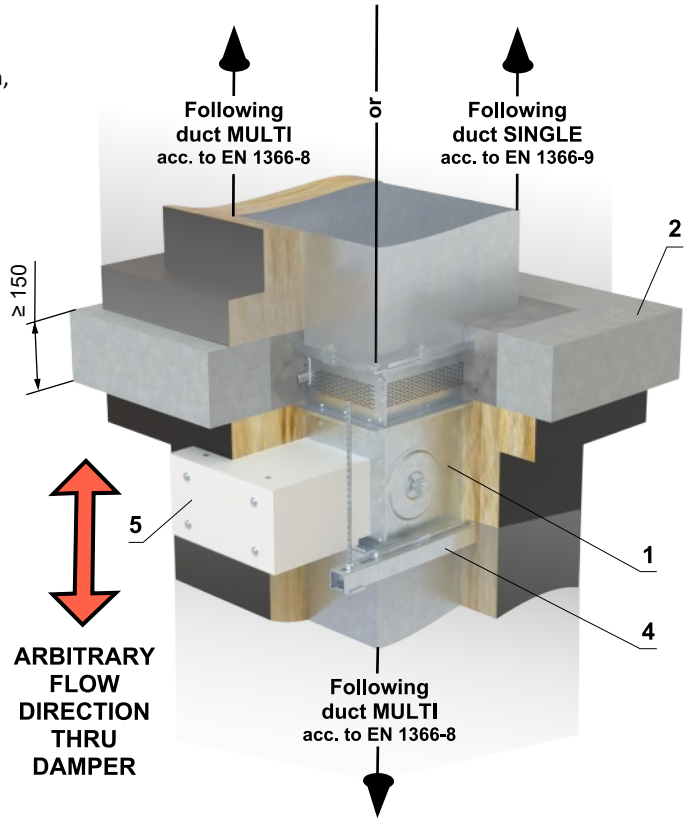

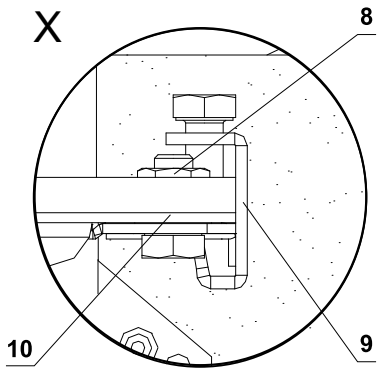

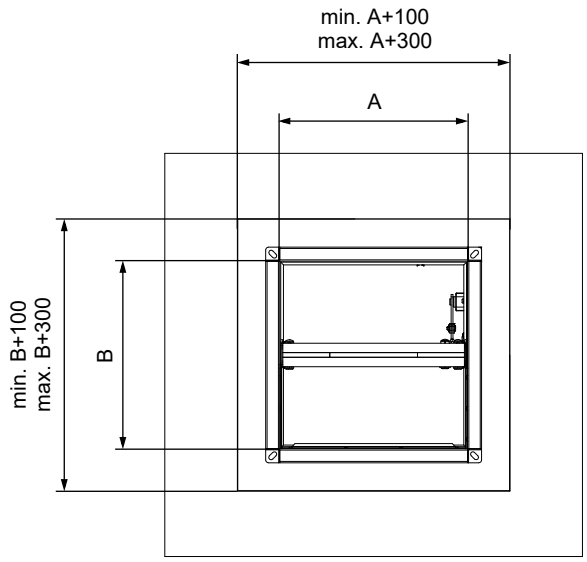

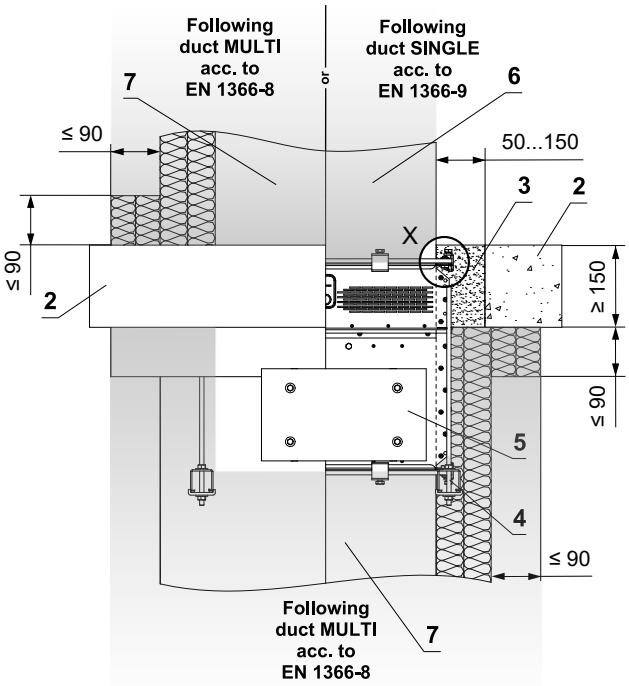

1 MSD - design „IB“
2 Solid ceiling construction
3 Mortar or gypsum
4 Suspension system (type according to duct manufacturer instructions) → see page 51
5 Actuator cover - must be removable after installation of the damper
6 SINGLE duct made of sheet metal, thickness min. 1 mm, acc. to EN 1366-9
7 MULTI duct made of sheet metal acc. to EN 1366-8 → see page 48
8 Flange connection at corners - M10 bolt, washers and nut
9 M8 C-clamps - maximum spacing of C-clamps 200 mm (type according to duct manufacturer instructions)
10 Ceramic selfadhesive sealing tape - arround the duct circumference (type according to duct manufacturer instructions)

In solid ceiling construction - Ablative Coated Batt
- damper placement in a single section

EI 90 (h_{ow}) S1500[H]C_{mod}HOT400/30AAmulti
E 120 (h_{ow}) S1500[H]C_{mod}HOT400/30AAmulti
*** EI 120 (h_{ow}) S1500[H]C_{10000}AAmulti**

** Applies to MSD-W damper*

- Standard low- and high-density rigid floor construction according to EN 1366-2
- For connection of following duct → see page 52
- The damper can be installed from both sides of the construction, i.e. from the top or the bottom side of the ceiling

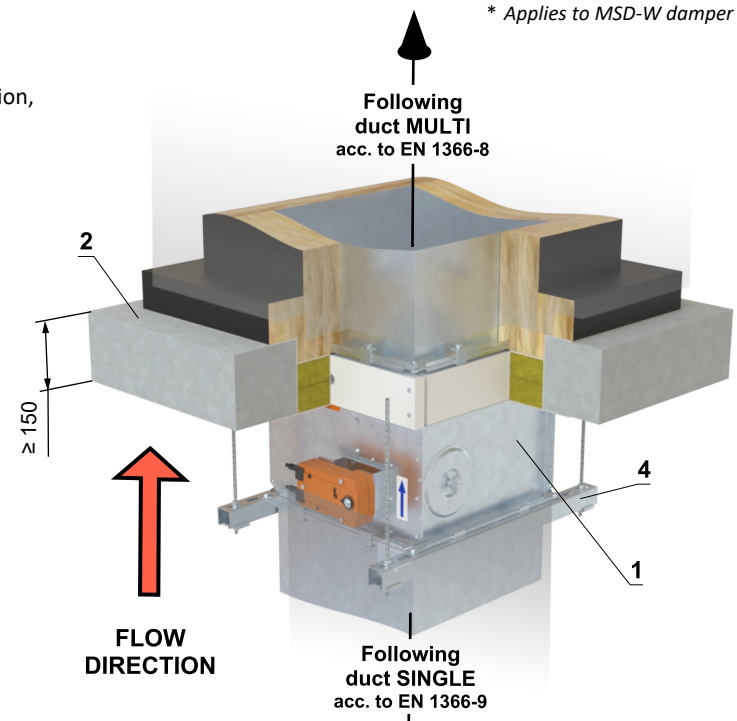

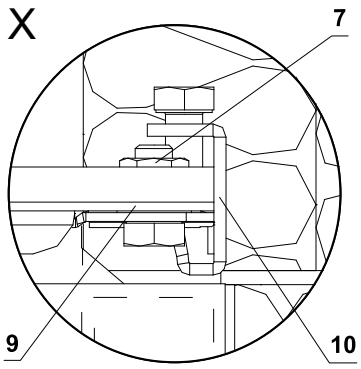

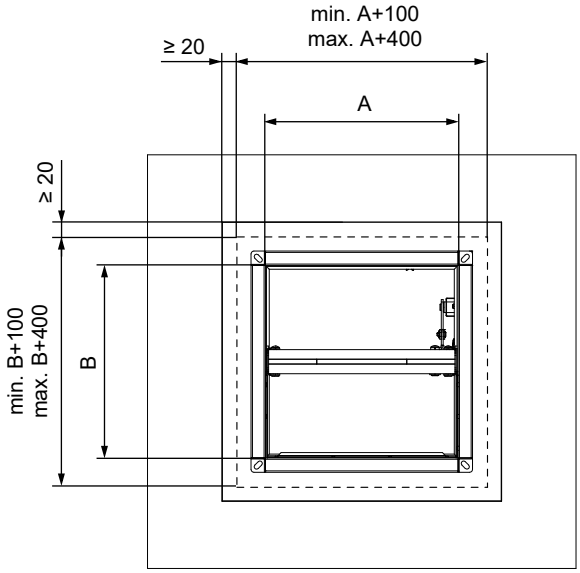

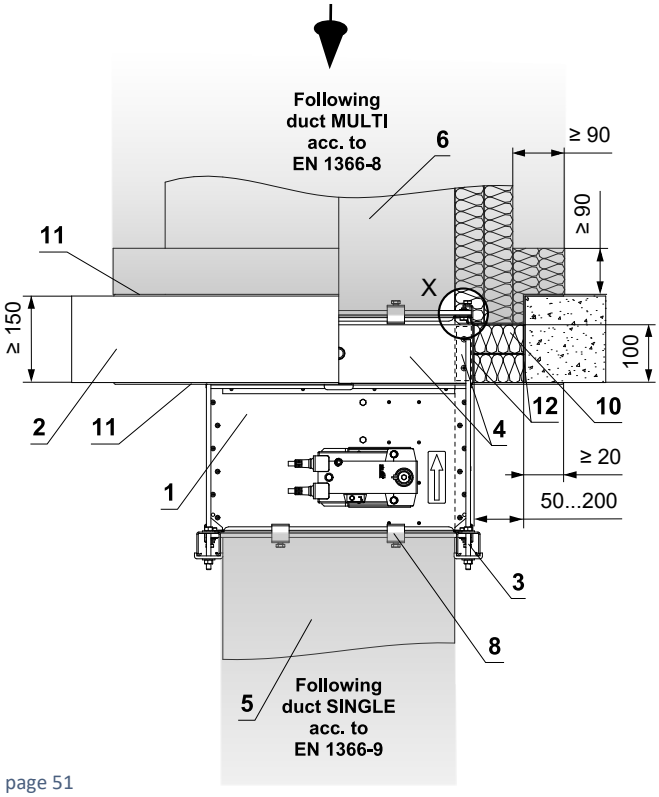

1 MSD-W / MSD - design „A1“
2 Solid ceiling construction
3 Suspension system (type according to duct manufacturer instructions) → see page 51
4 Protective cladding board - min. th. 30 mm, min. density 750 kg/m³ (e.g. PROMATECT-MST) → see page 59
5 SINGLE duct made of sheet metal, thickness min. 1 mm, acc. to EN 1366-9
6 MULTI duct made of sheet metal acc. to EN 1366-8 → see page 48
7 Flange connection at corners - M10 bolt, washers and nut
8 M8 C-clamps - maximum spacing of C-clamps 200 mm (type according to duct manufacturer instructions)
9 Ceramic selfadhesive sealing tape - arround the duct circumference (type according to duct manufacturer instructions)
Ablative Coated Batt System HILTI*
10 Mineral wool board - min. density 140 kg/m³ (HILTI CFS-CT B 1S 140/50...)
11 Fire stop coating - th. 1 mm (HILTI CFS-CT...) - coating is overcoated on the support construction and on the damper casing/duct.
12 Fire-resistant mastic - (HILTI CFS-S ACR...) fill the gap from both sides of the fire separation construction and around the perimeter of penetration and damper casing.

* HILTI system can be replaced by a similar system with the same or higher thickness, density, fire reaction class, tested according to EN 1366-3.

In solid ceiling construction - Ablative Coated Batt
- damper placement in a multi section

EI 90 (h_{ow}) S1500[H]C_{mod}HOT400/30AAmulti
E 120 (h_{ow}) S1500[H]C_{mod}HOT400/30AAmulti

- Standard low- and high-density rigid floor construction according to EN 1366-2
- For connection of following duct → see page 52
- The damper can be installed from both sides of the construction, i.e. from the top or the bottom side of the ceiling

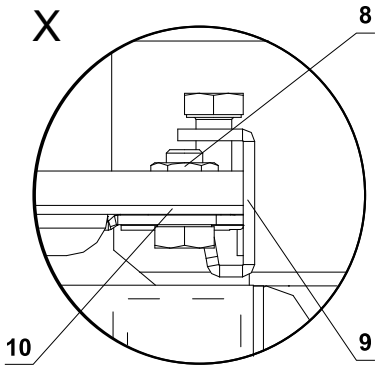

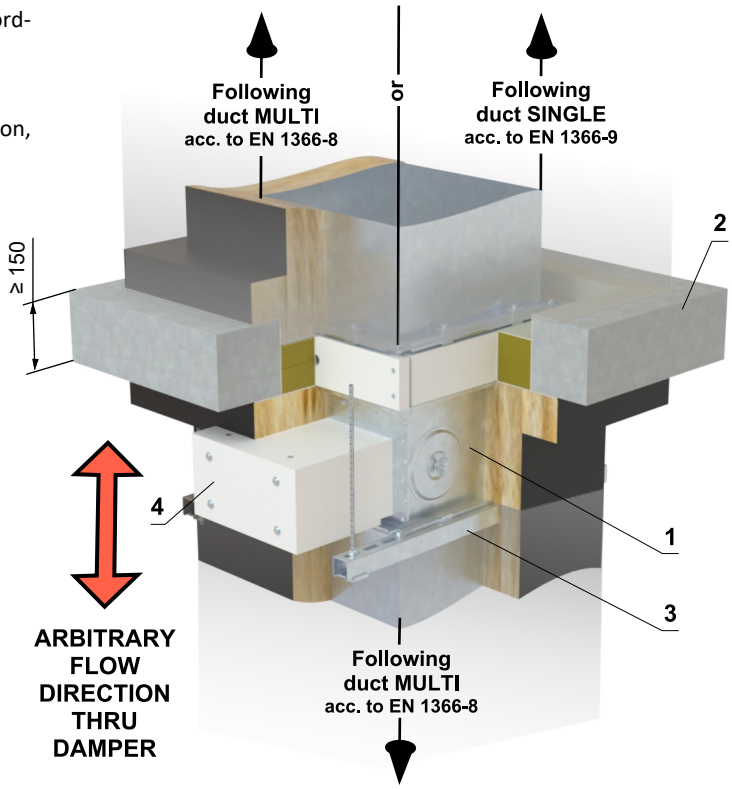

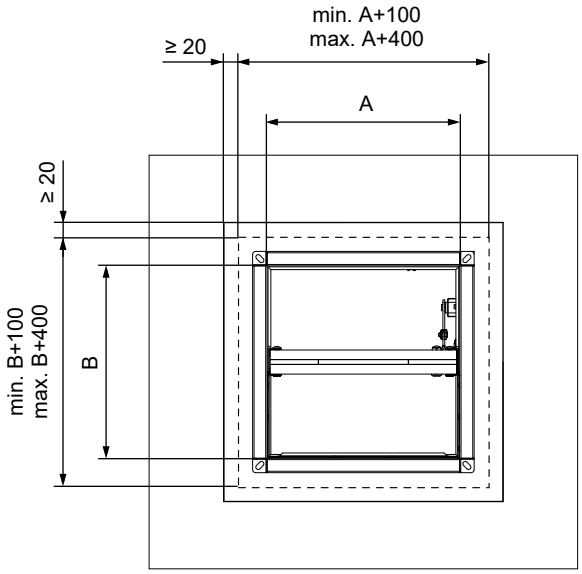

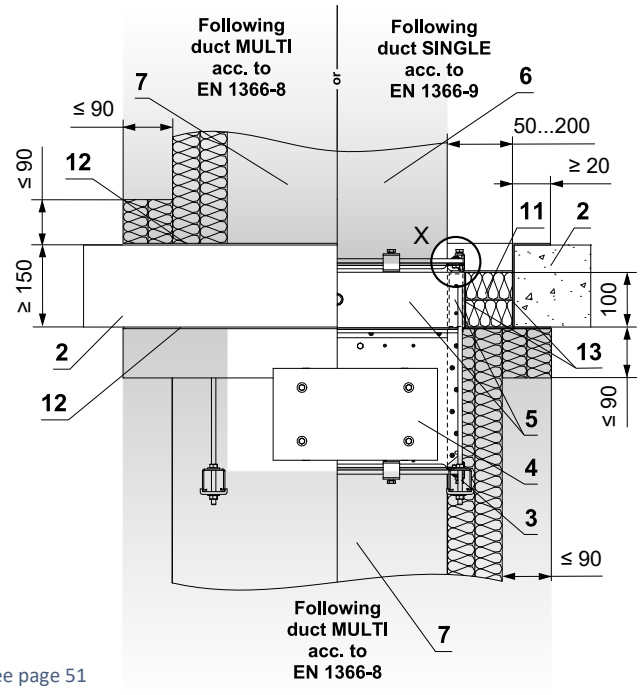

1 MSD - design „IB1“
2 Solid ceiling construction
3 Suspension system (type according to duct manufacturer instructions) → see page 51
4 Actuator cover - must be removable after installation of the damper
5 Protective cladding board - min. th. 30 mm, min. density 750 kg/m³ (e.g. PROMATECT-MST) → see page 59
6 SINGLE duct made of sheet metal, thickness min. 1 mm, acc. to EN 1366-9
7 MULTI duct made of sheet metal acc. to EN 1366-8 → see page 48
8 Flange connection at corners - M10 bolt, washers and nut
9 M8 C-clamps - maximum spacing of C-clamps 200 mm (type according to duct manufacturer instructions)
10 Ceramic selfadhesive sealing tape - arround the duct circumference (type according to duct manufacturer instructions)
Ablative Coated Batt System HILTI*
11 Mineral wool board - min. density 140 kg/m³ (HILTI CFS-CT B 1S 140/50...)
12 Fire stop coating - th. 1 mm (HILTI CFS-CT...) - coating is overcoated on the support construction and on the damper casing/duct.
13 Fire-resistant mastic - (HILTI CFS-S ACR...) fill the gap from both sides of the fire separation construction and around the perimeter of penetration and damper casing.

* HILTI system can be replaced by a similar system with the same or higher thickness, density, fire reaction class, tested according to EN 1366-3.

Installation damper into/onto smoke extraction ducts

Installation of the damper into/onto horizontal or vertical steel smoke extraction duct insulated with mineral wool
- damper placement in a multi section

EI 120 (h_{od}) S1500[H]C_{mod}HOT400/30AAmulti
EI 120 (v_{ed}) S1500[H]C_{mod}HOT400/30AAmulti

- The dampers may be installed onto or into smoke extraction ducts listed below:
  - **FlameshieldEN (manufacturer Kent Ductwork Ltd.)**
    The duct is made of 1.2 mm thick galvanized steel sheet and insulated with 1 layer of 90 mm thick stone wool Rockwool FirePro DuctRock Slab (manufacturer ROCKWOOL Ltd.). The stone wool is finished with a black aluminium foil on the outer side.
  - **FPL BW18 (manufacturer Fire Protection Ltd.)**
    The duct is made of galvanized steel sheet. The thickness of the duct depends of its dimensions. The surface of the duct is fire sprayed with Flamebar BW18 (manufacturer Firespray International Ltd). The duct is insulated with two layers of stone wool. The first layer is made of 50 mm thick ROCKWOOL FPL 110 SLAB and the second layer with aluminium foil is made of 50 mm thick ROCKWOOL FPL 110 FOIL FACED SLAB (manufacturer ROCKWOOL Ltd.)
  - **IFS-DS (manufacturer Imperial Ductwork Services Ltd.)**
    The duct is made of 1 mm thick galvanized steel sheet and insulated with two layers of 60 mm thick stone wool ULTIMATE U Protect Slab 4.0 Alu1 (manufacturer ISOVER). The stone wool is finished with a black aluminium foil on the outer side.
- The dampers may be installed onto or into other smoke extraction ducts than that specified above with the following limitations:
  - The duct shall be tested according to EN 1366-9 or EN 1366-8 depending on the intended use.
  - The duct shall be made of material of the same or greater density and of the same or greater thickness as the ducts listed above.
  - Changing surface protection materials is not permitted.
  - Changing the paint surface finish is not permitted.
- Support, drop rods, anchors etc. must be used in accordance with a duct manufacturer instructions.
- The connected duct shall be suspended in such a way that the transfer of all loads from the duct to the damper is completely excluded.
- The damper may be installed in position according picture below.

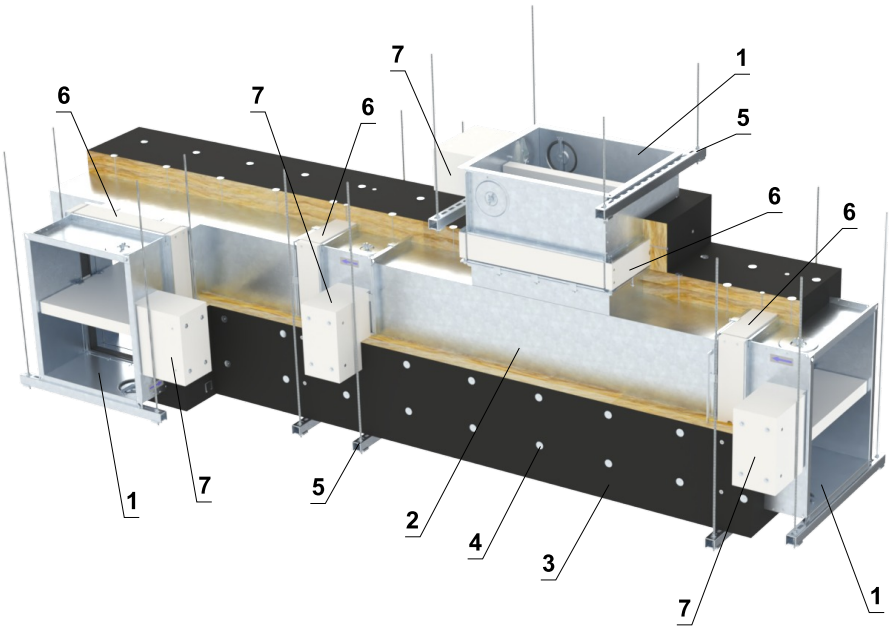

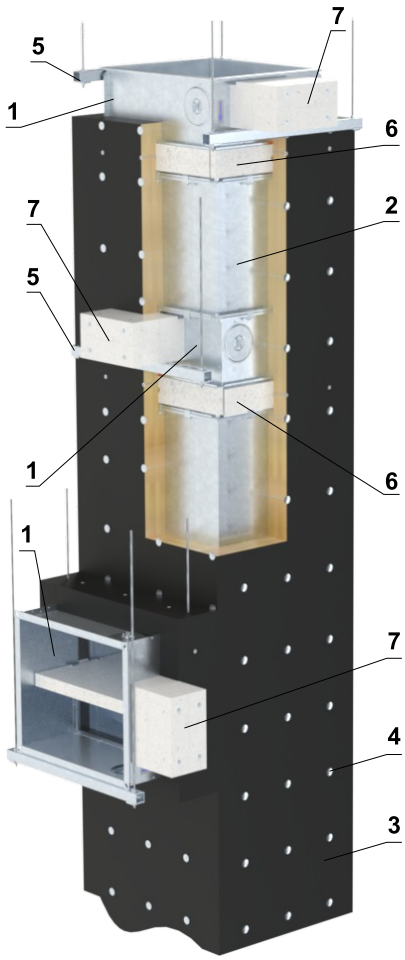

1 MSD - design „IB1“
2 Steel smoke extraction duct (type according to duct manufacturer instructions)
3 Surface protection material (type according to duct manufacturer instructions)
4 Steel insulation pin (type according to duct manufacturer instructions)
5 Suspension system (type according to duct manufacturer instructions)
6 Protective cladding board - min. th. 30 mm, min. density 750 kg/m³ (e.g. PROMATECT-MST) → see page 59
7 Actuator cover - must be removable after installation of the damper

(Continued on next page)

continuation of installation damper into/onto horizontal or vertical steel smoke extraction duct insulated with mineral wool

- <u>The damper is connected to the smoke extraction duct by the damper flange as follow:</u>
  - M10 bolts, washers and nuts are used at the corners of the flange
  - C-clamps with M8 bolts with a maximum spacing of 200 mm are used around the circumference
  - Ceramic selfadhesive sealing tape is inserted between flanges

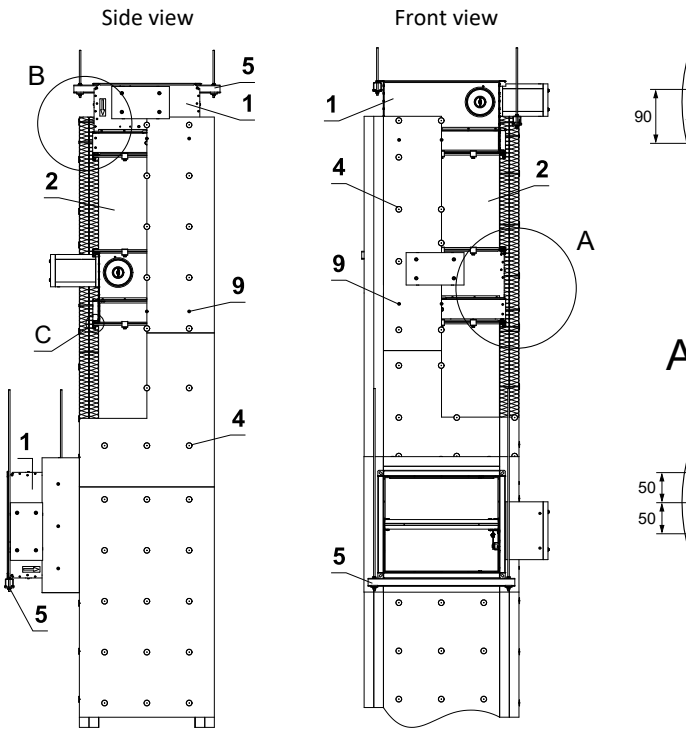

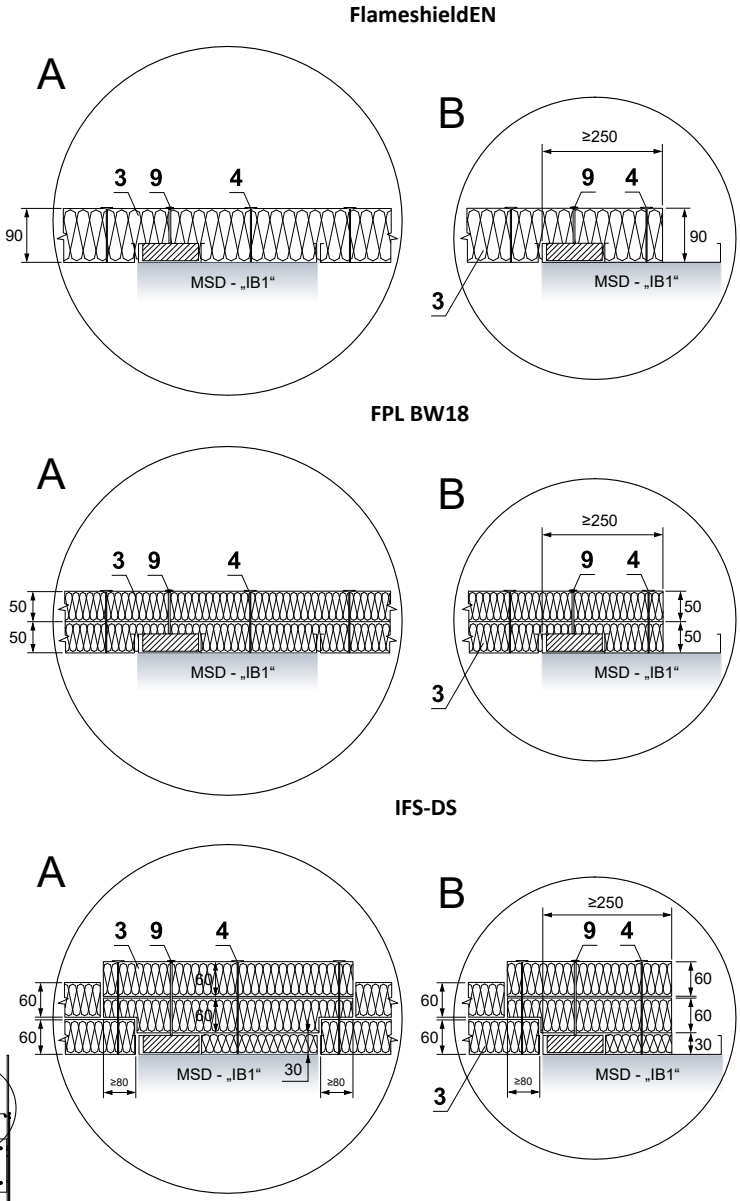

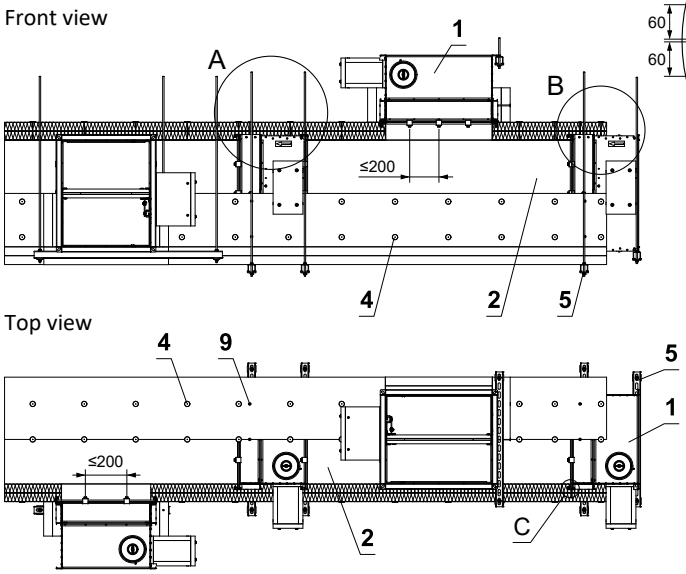

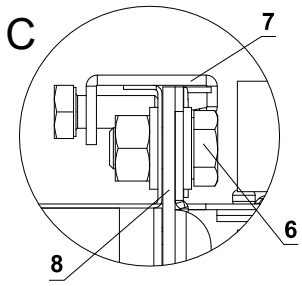

1 MSD - design „IB1“
2 Steel smoke extraction duct (type according to duct manufacturer instructions)
3 Surface protection material (type according to duct manufacturer instructions)
4 Steel insulation pin (type according to duct manufacturer instructions)
5 Suspension system (type according to duct manufacturer instructions)
6 Flange connection at corners - M10 bolt, washers and nut
7 M8 C-clamps - maximum spacing of C-clamps 200 mm (type according to duct manufacturer instructions)
8 Ceramic selfadhesive sealing tape - arround the duct circumference (type according to duct manufacturer instructions)
9 Insulation connection to the damper body – washer M5 (DIN 9021), screw 5×L mm (screw length = insulation thickness + 20 mm), with a maximum spacing of 200 mm and a distance of 50–150 mm from the damper edges

V. SUSPENSION SYSTEMS

Mounting to the ceiling wall

- The dampers must be suspended using threaded rods and mounting profiles. Their dimensioning depend on the weight of the damper.
- The dampers and the duct must be suspended separately.
- Following air-conditioning duct must be suspended or supported so that all load transfer from the following duct to the damper flanges is absolutely excluded. Adjacent duct must be suspended or supported, as required by the duct suppliers.

Examples of anchoring to the ceiling construction
Follow the instructions of fixing specialist or installation company

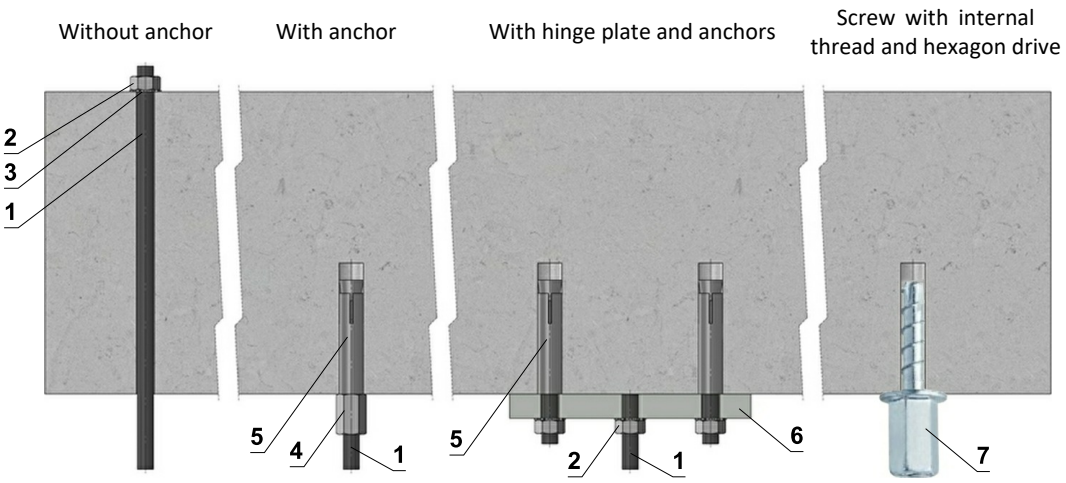

Hinge plates

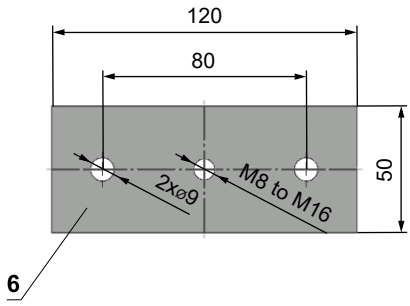

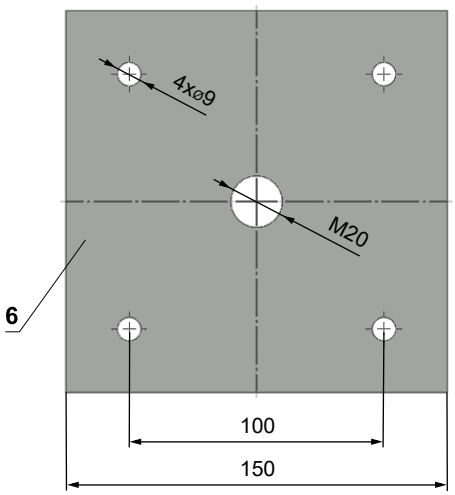

- If in doubt, always consult an anchor specialist engineer such as Halfen or Hilti.

1 Threaded rod M8 - M20
2 Nut M8 - M20
3 Washer for M8 - M20
4 Coupling Nut M8 - M20
5 Anchor
6 Hinge plate - min. thickness 10 mm
7 Concrete screw tested for fire resistance R30-R90, max. Tension up to 0.75 KN (length 35 mm)

Load capacities of threaded rods at the required fire resistance 60 min. < t ≤ 120 min.

Size	As [mm²]	Weight [kg]	
		for 1 rod	for 2 rods
M8	36,6	22	44
M10	58	35	70
M12	84,3	52	104
M16	157	96	192
M18	192	117	234
M20	245	150	300

Example of placing of mounting profiles HILTI

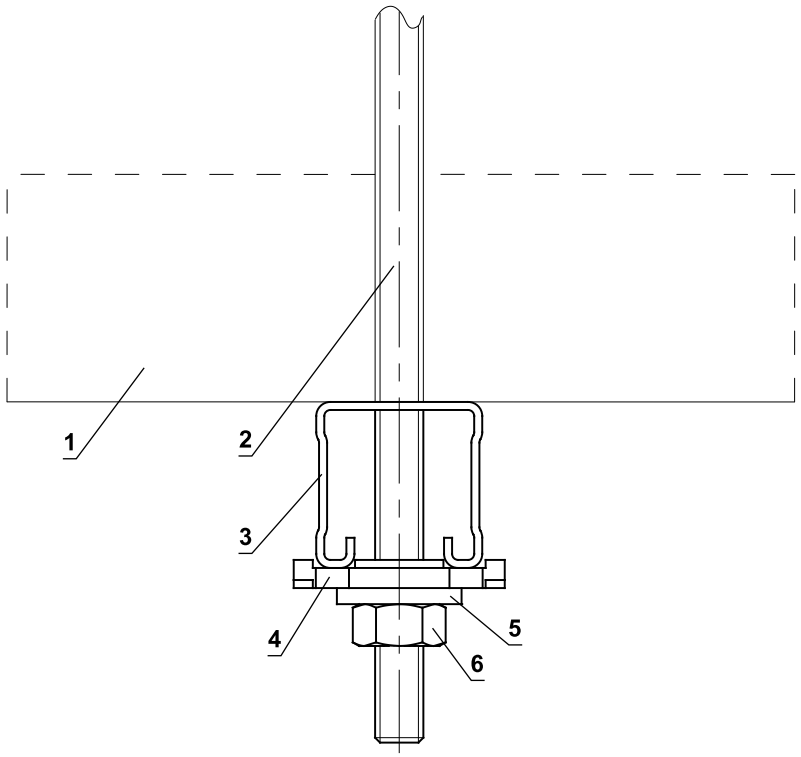

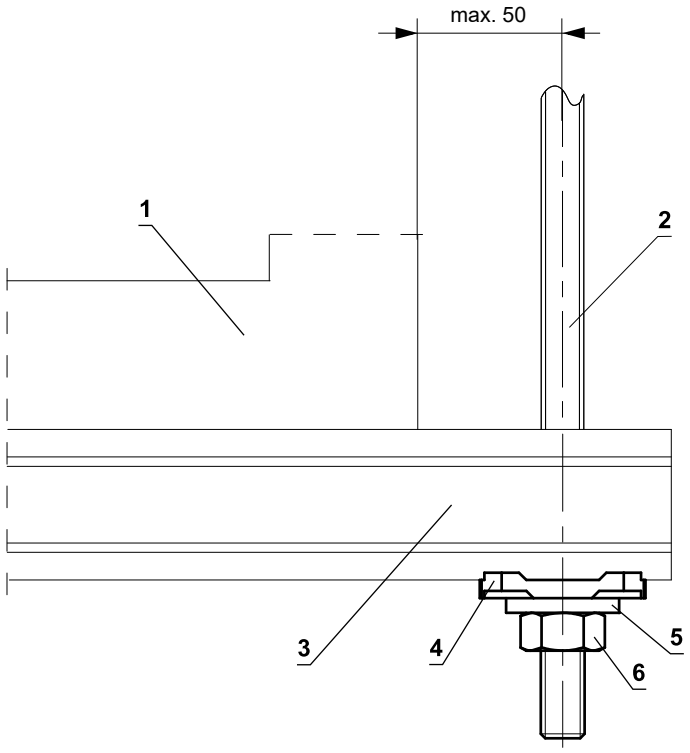

1 MSD
2 Threaded rod M8 - M12
3 Support HILTI MQ-41 or MQ-41/3
4 Bored plate HILTI MQZ-L
5 Washer for M8 - M12
6 Nut M8 - M12

Example of duct connection

Connection to smoke extract duct acc. to EN 1366-8 (MULTI) / to EN 1366-9 (SINGLE)

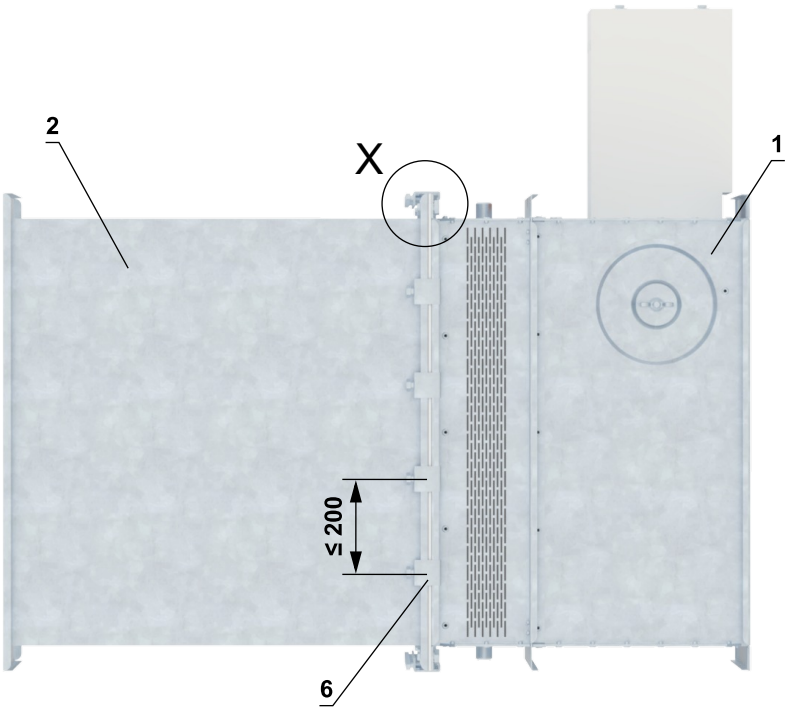

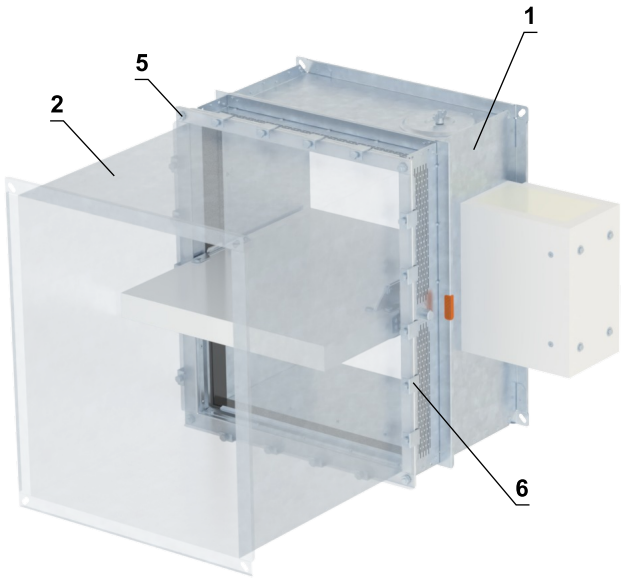

Electrically conductive connection

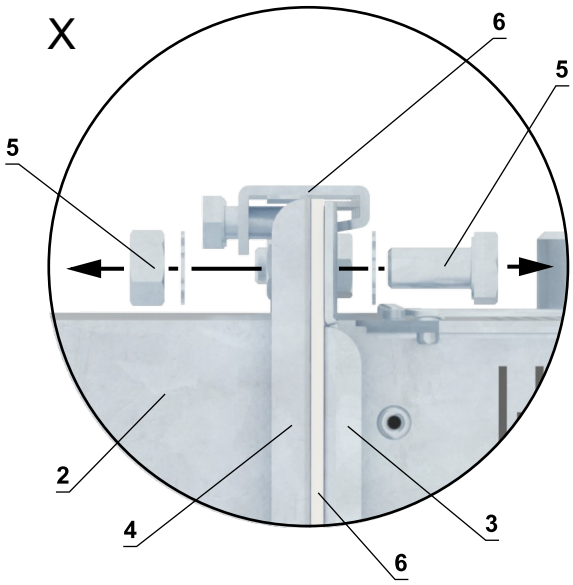

1 MSD
2 Duct
3 Flange of MSD
4 Flange of duct
5 M8 bolt assemply (bolt M8x20 mm, 2 pcs lock washer M8, nut M8) *
6 Ceramic selfadhesive sealing tape - arround the duct circumference (type according to duct manufacturer instructions)
7 M8 C-clamps - maximum spacing of C-clamps 200 mm (type according to duct manufacturer instructions)

* min. one connection must be electrically conductive

VI. TECHNICAL DATA

Pressure loss

Pressure loss calculation

$$\Delta p = \xi \cdot \rho \cdot \frac{w^2}{2}$$

Δp	[Pa]	pressure loss
w	[m/s]	air flow speed in nominal damper section
ρ	[kg/m³]	air density
ξ	[-]	coefficient of local pressure loss for the nominal damper section → see page 54

Determination of pressure loss by using diagram ρ = 1,2 kg/m³

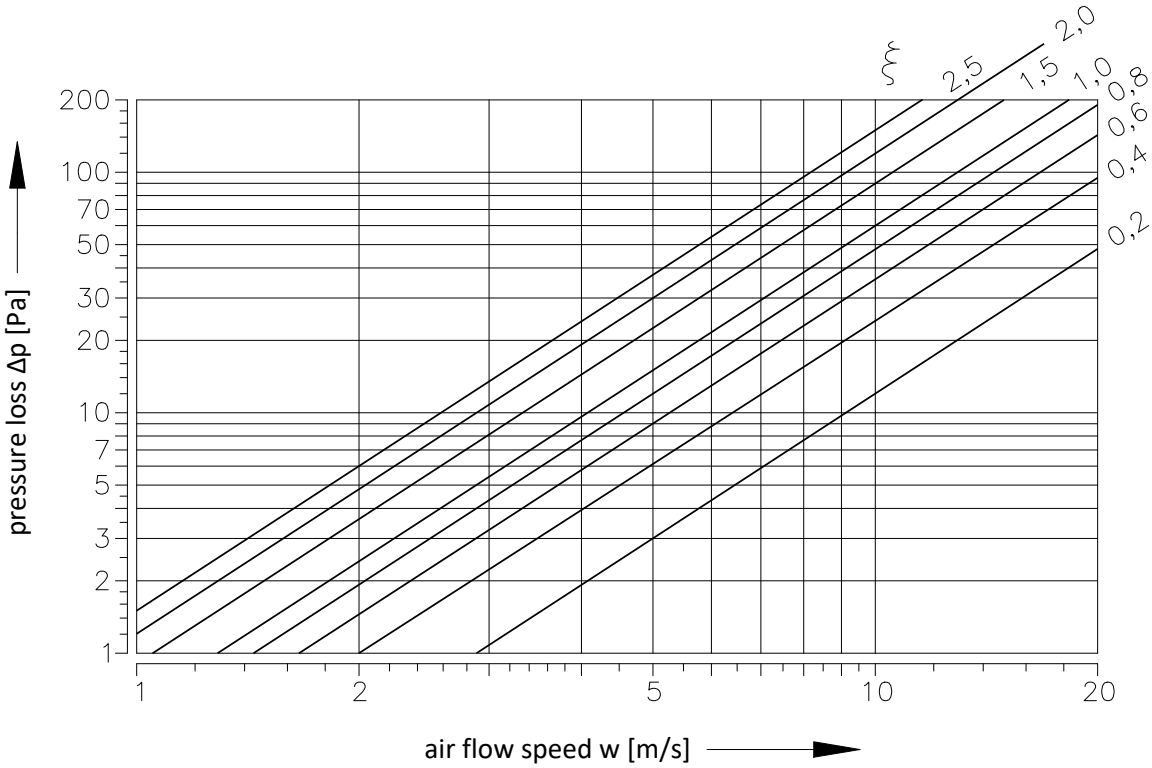

Coefficient of local pressure loss of rectangular dampers

	B									
A	**180**	**200**	**225**	**250**	**280**	**300**	**315**	**355**	**400**	**450**
180	2,1314	1,6906	1,3782	1,1149	1,0037	0,9288	0,7918	0,6827	0,6003	0,5350
200	1,9945	1,5804	1,2423	1,0368	0,9748	0,8785	0,7383	0,6367	0,5585	0,4976
225	1,9207	1,5162	1,1256	0,9994	0,9341	0,8442	0,7137	0,6078	0,5329	0,4772
250	1,8415	1,4584	1,1032	0,9651	0,9009	0,8068	0,6837	0,5832	0,5125	0,4590
280	1,7505	1,3782	1,0732	0,9116	0,8571	0,7597	0,6484	0,5543	0,4847	0,4366
300	1,6853	1,3311	1,0400	0,8635	0,8046	0,7148	0,6099	0,5264	0,4665	0,4109
315	1,6071	1,2690	1,0037	0,8303	0,7597	0,6645	0,5864	0,5050	0,4419	0,3927
355	1,5408	1,2155	0,9544	0,7929	0,7083	0,6356	0,5607	0,4815	0,4227	0,3756
400	1,4841	1,1706	0,9063	0,7651	0,6859	0,6227	0,5382	0,4633	0,4045	0,3606
450	1,4359	1,1331	0,8913	0,7394	0,6666	0,5896	0,5200	0,4473	0,3916	0,3478
500	1,3996	1,1021	0,8624	0,7201	0,6548	0,5810	0,5061	0,4344	0,3799	0,3371
550	1,3803	1,0882	0,8378	0,7073	0,6474	0,5757	0,4965	0,4269	0,3734	0,3349
560	1,3643	1,0754	0,8282	0,7009	0,6324	0,5725	0,4922	0,4227	0,3692	0,3285
600	1,3493	1,0582	0,8218	0,6944	0,6270	0,5585	0,4858	0,4184	0,3659	0,3242
630	1,3332	1,0497	0,8100	0,6837	0,6238	0,5436	0,4804	0,4130	0,3606	0,3199
650	1,3204	1,0379	0,7907	0,6752	0,6003	0,5393	0,4740	0,4066	0,3542	0,3157
700	1,3108	1,0304	0,7832	0,6741	0,5949	0,5382	0,4719	0,4045	0,3531	0,3146
710	1,3043	1,0272	0,7747	0,6688	0,5896	0,5371	0,4697	0,4034	0,3520	0,3135
750	1,2926	1,0176	0,7683	0,6634	0,5842	0,5307	0,4633	0,3980	0,3478	0,3103
800	1,2808	1,0079	0,7618	0,6559	0,5767	0,5222	0,4601	0,3959	0,3456	0,3060
900	1,2594	0,9908	0,7479	0,6441	0,5692	0,5136	0,4526	0,3884	0,3381	0,3007
1000	1,2433	0,9780	0,7383	0,6367	0,5607	0,4976	0,4462	0,3831	0,3338	0,2975
1100	1,2284	0,9662	0,7287	0,6281	0,5478	0,4869	0,4408	0,3777	0,3296	0,2932
1250	1,2155	0,9544	0,7126	0,6206	0,5339	0,4804	0,4355	0,3734	0,3264	0,2900
1400	1,2027	0,9459	0,6998	0,6142	0,5254	0,4783	0,4301	0,3692	0,3231	0,2857
1500	1,1952	0,9395	0,6955	0,6110	0,5157	0,4708	0,4280	0,3670	0,3199	0,2846

	B									
A	**500**	**550**	**560**	**600**	**630**	**650**	**700**	**710**	**750**	**800**
180	0,4879	0,4665	0,4462	0,4216	0,4109	0,3916	0,3884	0,3820	0,3681	0,3585
200	0,4526	0,4323	0,4152	0,3959	0,3820	0,3681	0,3606	0,3552	0,3424	0,3328
225	0,4355	0,4152	0,4002	0,3788	0,3681	0,3531	0,3456	0,3413	0,3338	0,3221
250	0,4216	0,4002	0,3809	0,3659	0,3542	0,3403	0,3328	0,3274	0,3210	0,3092
280	0,3948	0,3766	0,3585	0,3435	0,3328	0,3199	0,3167	0,3114	0,2975	0,2932
300	0,3766	0,3531	0,3435	0,3253	0,3157	0,3071	0,2996	0,2953	0,2814	0,2750
315	0,3574	0,3349	0,3264	0,3103	0,3007	0,2932	0,2846	0,2782	0,2696	0,2611
355	0,3413	0,3253	0,3114	0,2975	0,2868	0,2750	0,2718	0,2664	0,2557	0,2493
400	0,3274	0,3082	0,2985	0,2900	0,2761	0,2654	0,2589	0,2557	0,2472	0,2386
450	0,3167	0,2964	0,2889	0,2782	0,2654	0,2589	0,2525	0,2461	0,2386	0,2301
500	0,3071	0,2943	0,2803	0,2664	0,2579	0,2482	0,2429	0,2386	0,2311	0,2236
550	0,3039	0,2857	0,2771	0,2611	0,2450	0,2365	0,2301	0,2268	0,2279	0,2194
560	0,2996	0,2825	0,2729	0,2515	0,2504	0,2408	0,2290	0,2268	0,2236	0,2172
600	0,2943	0,2793	0,2707	0,2493	0,2482	0,2375	0,2268	0,2247	0,2194	0,2140
630	0,2910	0,2761	0,2664	0,2482	0,2450	0,2343	0,2268	0,2247	0,2161	0,2119
650	0,2900	0,2707	0,2632	0,2461	0,2418	0,2322	0,2258	0,2236	0,2140	0,2097
700	0,2868	0,2654	0,2622	0,2450	0,2408	0,2301	0,2247	0,2226	0,2129	0,2087
710	0,2846	0,2632	0,2600	0,2440	0,2397	0,2290	0,2226	0,2215	0,2119	0,2076
750	0,2814	0,2611	0,2568	0,2397	0,2365	0,2268	0,2204	0,2194	0,2108	0,2054
800	0,2793	0,2600	0,2547	0,2354	0,2333	0,2236	0,2183	0,2172	0,2087	0,2022
900	0,2739	0,2547	0,2504	0,2333	0,2301	0,2172	0,2151	0,2129	0,2044	0,1990
1000	0,2696	0,2515	0,2461	0,2290	0,2268	0,2151	0,2119	0,2087	0,2001	0,1958
1100	0,2664	0,2482	0,2429	0,2258	0,2236	0,2129	0,2097	0,2065	0,1969	0,1937
1250	0,2632	0,2429	0,2397	0,2226	0,2204	0,2076	0,2065	0,2044	0,1947	0,1905
1400	0,2611	0,2397	0,2375	0,2204	0,2183	0,2044	0,2033	0,2022	0,1926	0,1894
1500	0,2589	0,2386	0,2365	0,2183	0,2161	0,2022	0,2012	0,2001	0,1905	0,1883

Coefficient of local pressure loss of circular dampers

ØD	**180**	**200**	**225**	**250**	**280**	**315**	**355**	**400**	**450**	**500**	**560**	**630**
ξ	3,546	2,124	1,291	0,877	0,609	0,438	0,328	0,255	0,205	0,173	0,147	0,127

Noise data

Level of acoustic output corrected with filter A

$$L_{WA} = L_{W1} + 10 \log(S) + K_A$$

L_{WA}	[dB(A)]	level of acoustic output corrected with filter A
L_{W1}	[dB]	level of acoustic output L_{W1} related to the 1 m² section
S	[m²]	duct cross section
K_A	[dB]	correction to the weight filter A

Level of acoustic output L_{W1}[dB] related to the 1 m² section - rectangular dampers

	ξ [-]											
w [m/s]	**0,2**	**0,3**	**0,4**	**0,5**	**0,6**	**0,7**	**0,8**	**0,9**	**1**	**1,5**	**2**	**2,5**
2	15,5	18,7	20,9	22,6	24	25,2	26,3	27,2	28	31,2	33,4	35,1
3	26,1	29,2	31,5	33,2	34,6	35,8	36,9	37,8	38,6	41,7	44	45,7
4	33,6	36,7	39	40,7	42,1	43,3	44,3	45,3	46,1	49,2	51,5	53,2
5	39,4	42,5	44,8	46,5	47,9	49,1	50,2	51,1	51,9	55	57,3	59
6	44,1	47,3	49,5	51,3	52,7	53,9	54,9	55,8	56,6	59,8	62	63,8
7	48,2	51,3	53,5	55,3	56,7	57,9	58,9	59,8	60,7	63,8	66,1	67,8
8	51,6	54,8	57	58,8	60,2	61,4	62,4	63,3	64,1	67,3	69,5	71,3
9	54,7	57,9	60,1	61,8	63,2	64,4	65,5	66,4	67,2	70,4	72,6	74,3
10	57,4	60,6	62,8	64,6	66	67,2	68,2	69,1	70	73,1	75,3	77,1
11	59,9	63,1	65,3	67,1	68,5	69,7	70,7	71,6	72,4	75,6	77,8	79,6
12	62,2	65,4	67,6	69,3	70,7	71,9	73	73,9	74,7	77,9	80,1	81,8

Level of acoustic output L_{W1}[dB] related to the 1 m² section - circular dampers

	ξ [-]											
w [m/s]	**0,1**	**0,2**	**0,3**	**0,4**	**0,6**	**0,8**	**1,0**	**1,5**	**2**	**2,5**	**3**	**3,5**
2	9	11,5	14,7	16,9	20,1	22,3	24,1	27,2	29,4	31,2	32,6	33,8
3	16,7	22,1	25,3	27,5	30,7	32,9	34,6	37,8	40	41,7	43,2	44,4
4	24,2	29,6	32,8	35	38,1	40,4	42,1	45,3	47,5	49,2	50,7	51,9
5	30	35,4	38,6	40,8	44	46,2	47,9	51,1	53,3	55,1	56,5	57,7
6	34,8	40,2	43,3	45,6	48,7	51	52,7	55,8	58,1	59,8	61,2	62,4
7	38,8	44,2	47,3	49,6	52,7	55	56,7	59,9	62,1	63,8	65,2	66,4
8	42,3	47,7	50,8	53,1	56,2	58,4	60,2	63,3	65,6	67,3	68,7	69,9
9	45,4	50,7	53,9	56,1	59,3	61,5	63,3	66,4	68,6	70,4	71,8	73
10	48,1	53,5	56,6	58,9	62	64,3	66	69,1	71,4	73,1	74,5	75,7
11	50,6	56	59,1	61,4	64,5	66,7	68,5	71,6	73,9	75,6	77	78,2
12	52,8	58,2	61,4	63,6	66,8	69,0	70,7	73,9	76,1	77,9	79,3	80,5

Cerrection to the weight filter A - rectangular and circular dampers

w [m/s]	**2**	**3**	**4**	**5**	**6**	**7**	**8**	**9**	**10**	**11**	**12**
K_A [dB]	-15	-11,8	-9,8	-8,4	-7,3	-6,4	-5,7	-5	-4,5	-4	-3,6

Level of acoustic output in octave ranges

$$L_{Woct} = L_{W1} + 10 \log(S) + L_{rel}$$

L_{Woct}	[dB]	spectrum of acoustic output in octave range
L_{W1}	[dB]	level of acoustic output L_{W1} related to the 1 m^2 section
S	[m^2]	duct cross section
L_{rel}	[dB]	relative level expressing the shape of the spectrum

Relative level expressing the shape of the spectrum L_{rel} - rectangular and circular dampers								
	f [Hz]							
w [m/s]	**63**	**125**	**250**	**500**	**1000**	**2000**	**4000**	**8000**
2	-4,5	-6,9	-10,9	-16,7	-24,1	-33,2	-43,9	-56,4
3	-3,9	-5,3	-8,4	-13,1	-19,5	-27,6	-37,4	-48,9
4	-3,9	-4,5	-6,9	-10,9	-16,7	-24,1	-33,2	-43,9
5	-4	-4,1	-5,9	-9,4	-14,6	-21,5	-30,0	-40,3
6	-4,2	-3,9	-5,3	-8,4	-13,1	-19,5	-27,6	-37,4
7	-4,5	-3,9	-4,9	-7,5	-11,9	-17,9	-25,7	-35,1
8	-4,9	-3,9	-4,5	-6,9	-10,9	-16,7	-24,1	-33,2
9	-5,2	-3,9	-4,3	-6,4	-10,1	-15,6	-22,7	-31,5
10	-5,5	-4	-4,1	-5,9	-9,4	-14,6	-21,5	-30
11	-5,9	-4,1	-4	-5,6	-8,9	-13,8	-20,4	-28,8
12	-6,2	-4,3	-3,9	-5,3	-8,4	-13,1	-19,5	-27,6

VII. MATERIAL, FINISHING

- Damper casings are made from galvanized sheet metal without further surface treatment.
- Damper blades and actuator cover are made from fire resistant asbestos free boards made of mineral fibres.
- Fasteners are galvanized.
- According to the customer's requirements, dampers can be made of stainless steel material.
- Specifications for stainless-steel design:
  - Class A2 – Food-grade stainless steel (AISI 304 – EN 1.4301)
  - Class A4 – Chemistry-grade stainless steel (AISI 316, 316L – EN 1.4401, EN 1.4404)

The respective stainless steel is the material for all components that are located or entering the damper inner space; components outside the damper casing are typically from galvanised sheet metal (fasteners for mounting the actuator).

The following components, including the fasteners, are made from stainless steel at all times:

1) Damper casing and all components permanently attached
2) Blade holders including pins, metal parts of blades
3) Control components inside the damper (L-profile, pin with lever, rod, fasteners)
4) Inspection opening cover including the stirrup and fasteners (if they are parts of the cover)
5) Bearing for torque transfer from the lever with pin on the blade L-profile (made from AISI 440C)

The damper blade is made from boards of homogeneous material Promatect-H, connected with "U" clips on the outside, sealed with Promat K84 glue.

Plastic, rubber and silicon components, sealants, foaming tapes, glass-ceramic seals, housings, brass bearings of the blade, actuators are identical for all material variants of the dampers.

Some fasteners and components are only available in one class of stainless steel; the type will be used in all stainless-steel variants.

The damper blade in the variant for chemical environments (Class A4) is always treated with a coating of chemically resistant Promat SR.

Any other requirements for the design will be considered atypical and will be addressed on an individual basis.

VIII. TRANSPORTATION, STORAGE AND WARRANTY

Logistic terms

- Dampers are delivered on pallets. As standard, the dampers are wrapped in plastic foil for protection during transport and must not be used for long-term storage. Temperature changes during transport can cause condensation of water inside the packaging and thereby cause corrosion of materials used in the dampers (e.g. white corrosion on zinc-coated items or mould on calcium silicate). Therefore, it is necessary to remove the transport packaging immediately after unloading to allow air to circulate around the product.
- The dampers must be stored in clean, dry, well ventilated and dust-free environment out of direct sunlight. Ensure protection against moisture and extreme temperatures (minumum temperature +5°C). The dampers must be protected against mechanical and accidental damage prior to installation.
- Another required packaging system should be approved and agreed by manufacturer. Packaging material is not returnable in case that another packaging system (material) is required and used and it is not included into final price of damper.
- Dampers are transported by box freight vehicles without direct weather impact, there must not occur any shocks and ambient temperature must not exceed +50°C. Dampers must be protected against impact when transported and manipulated. During transportation, the damper blade must be in the "CLOSED" position.
- Dampers must be stored indoor in environment without any aggressive vapours, gases or dust. Indoor temperature must be in the range from -30°C to +50°C and maximum relative humidity 95%.

Warranty

- The manufacturer provides a warranty of 24 months from the date of dispatch for the dampers.
- In case of using a Schischek actuator, the manufacturer provides a 12-month warranty for the actuator from the date of shipment.
- The warranty for dampers MSD, provided by the manufacturer, is completely void if actuating, closing and control devices are unprofessionally handled by untrained workers or if electric components, i.e. limit switches, actuators, communication and supply devices and thermoelectric activation devices are dismounted.
- The warranty is void if dampers are used for other purposes, devices and working conditions than those allowed by these technical conditions or if the dampers are mechanically damaged during handling.
- If the dampers are damaged by transport, a record must be written down with the forwarder at reception for later complaint.

IX. ASSEMBLY, ATTENDANCE AND MAINTENANCE

- Assembly, maintenance and damper function check can be done only by qualified and trained person, i.e. “AUTHORIZED PERSON” according to the manufacturer documentation. All works done on the fire dampers must be done according international and local norms and laws.
- All effective safety standards and directives must be observed during damper assembly.
- To ensure reliable damper function it is necessary to avoid blocking the actuating mechanism and contact surfaces with collected dust, fibre and sticky materials and solvents.
- Flange and screw joints must be conductively connected to protect against dangerous contact. 2 galvanized lock washers that are placed under the head of one screw and a fastened nut are used for conductive connection.

Manual operation - actuator control without electric voltage

- A special wrench (part of the actuator) can be used to manually turn the damper blade to any position. When the wrench is turned in the direction of the arrow, the damper blade rotates to its open position. As the blade rotation is stopped, in every position, the actuator will be locked. Unlocking is possible even manually as per instructions on the actuator, or by the activation of the supply voltage.

Installation / fixing the damper

- The damper casing shall not be deformed in the course of bricking in.
- Once the damper is built in, the damper blade shall not grind on the damper casing during opening or closing.

Protection of the damper casing against buckling during installation, especially for large sizes!

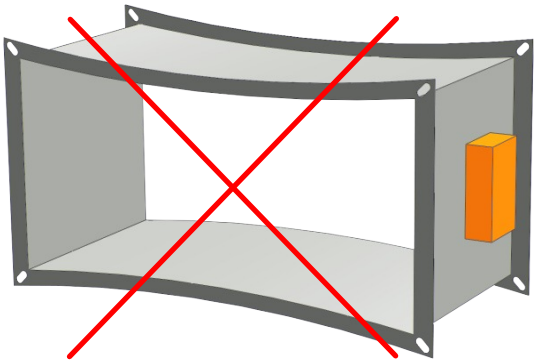

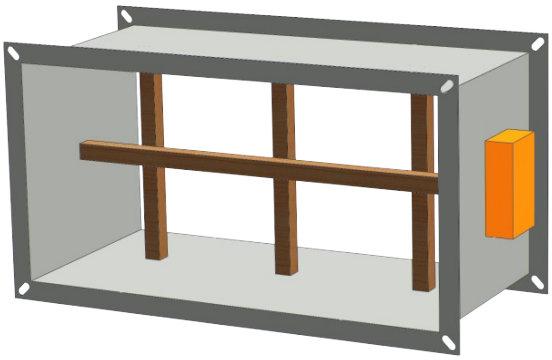

Protective cladding boards

- Protective cladding boards must be used as part of the penetration filling of installation with Ablative Coated Batt.
- Can be ordered from MANDIK (installed on the damper or as an accessory) or can be sourced from local supplier
- If protective cladding boards are required, this must be specified in the ordering key
- Protective cladding boards are made of PROMATECT-MST, thickness 30 mm.
- Glue K84 is not included in the package

Installation procedure

1) Apply K84 glue over the entire surface
2) Attach protective cladding boards on all sides of a fire damper and glue them on the damper casing
3) Screw parts A and B using four screws 5x70 mm
4) Completely fill the gaps with glue

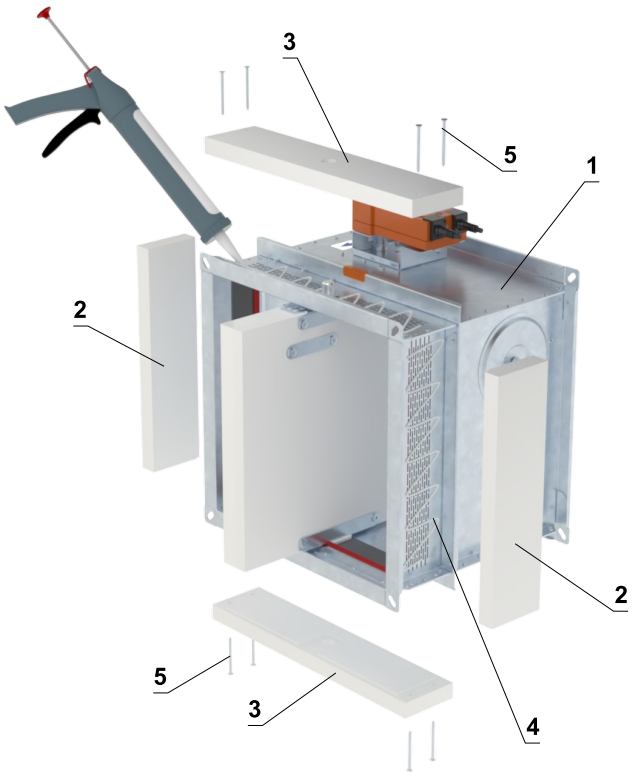

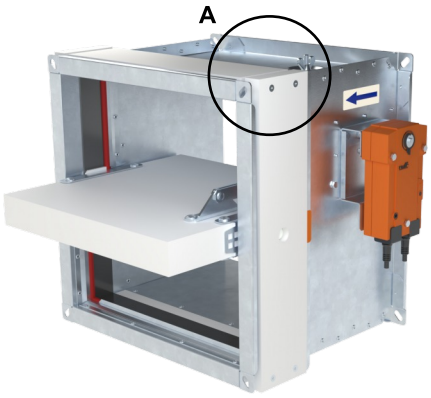

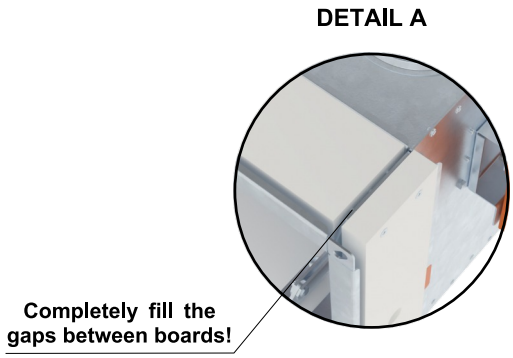

1 MSD
2 Part A
3 Part B
4 Glue PROMAT K-84
5 Screw 5x70 mm

Part A

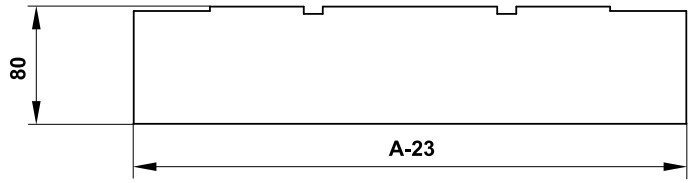

- Detailed dimensions of protective cladding boards on request.

Part B

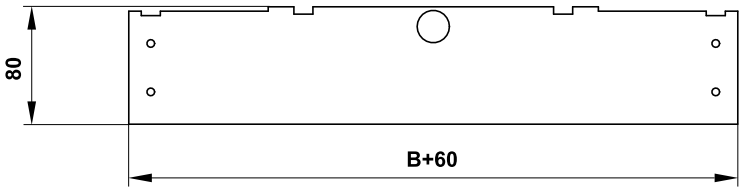

Electrical connection of the actuator in protection box

protection box without slot or predrilled holes

- Drill two holes into the protection box (from outside to inside) and pull through field wiring cables (CAT 3 fire resistant cables as BS 8519) to connect to the actuator trailing lead inside the housing, using a standard screwed cable connector block, the protection box is made of calcium silicate plates.
- Procedure
  - Use drill (drill size acc. To suit connecting cable Ø + 2 mm for seal up by mastic) and make two holes. It is possible to drill holes in any side of the housing.
  - Pull the heat resistant cable through the calcium silicate plate (wall) and connect with cables from actuator acc. To electrical diagram → see pages 6 to 9
  - Seal up the space around cable with fire resistant mastic (HILTI CFS-S ACR, PROMASTOP) or equivalent.
  - Let the mastic harden

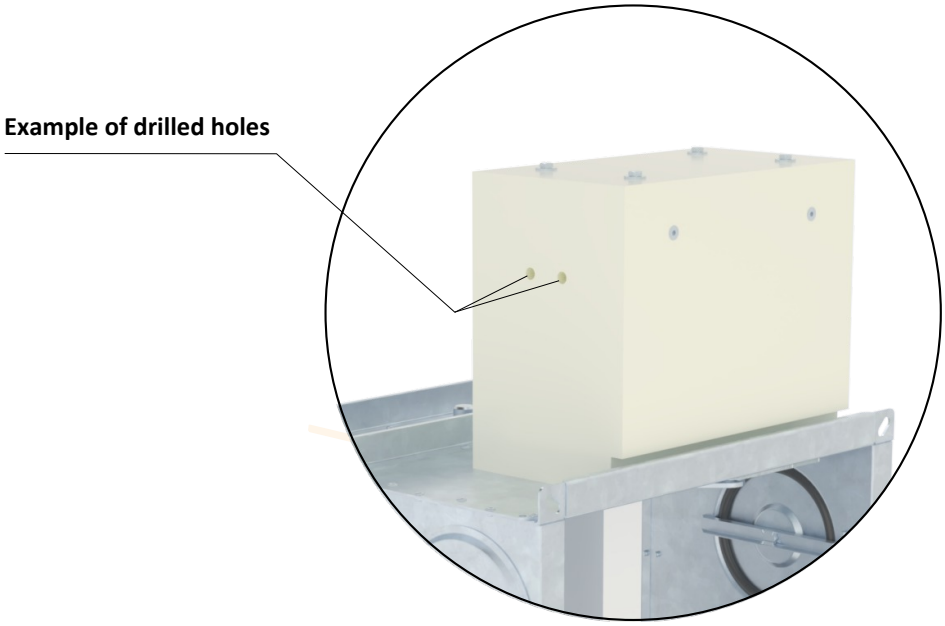

Example of position of holes in the wall of the box, without pre-manufactured slot

Entry into service and revisions

- Before entering the dampers into operation after assembly and after sequential revisions, checks and functionality tests of all designs including operation of the electrical components must be successfully provided and finished. After entering into operation, these revisions must be done according to requirement set by national regulations.
- In case that dampers are found unable to serve for their function for any cause, it must be clearly marked. The operator is obliged to ensure that the damper is put into condition in which it is ready for function and meanwhile he is obliged to provide the fire protection by another appropriate way.

- <u>Removing the inspection hole cover</u>
  - Unscrew four of the edge screws to release the cover and then remove it from its original position.

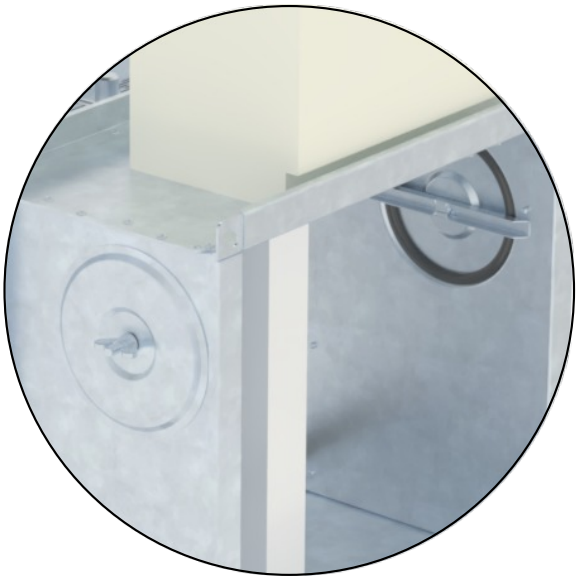

Inspection hole detail

- Results of regular checks, imperfections found and all-important facts connected with the damper function must be recorded in the "FIRE BOOK" and immediately reported to the operator.
- Before entering the dampers into operation after their assembly and by sequential checks, the following checks must be carried out for all designs.
- Visual inspection of proper damper integration, inside damper area, damper blade, contact surfaces and silicon sealing.

- Ensure each damper is fully checked for operational capability, control should be initiated from the control system. Dampers blades should open and close correctly and operation should be visually inspected and documented prior to handover.

X. ORDERING INFORMATIONS

Ordering key MSD

Rectangular damper MSD

1	2	3		4	5	6	7		8
MSD	EN	800x400	/	375	.44	IB1	Q30	-	ZN

EXAMPLE:

MSD EN 800x400/375 .44 IB1 Q30-ZN

Rectangular smoke control damper MSD, dimension 800x400 mm, built length 375 mm, control design with actuating mechanism 230 V, design includes protection box of the actuator and include the protective cladding boards in line with the blade, flange dimension 30 mm, galvanized material variant.

1| Type of smoke control damper - MSD

2| Country of destination

3| Damper dimensions A x B → see pages 18 to 27
"A" is the width of the damper
"B" is the height of the damper

4| Built length - 375 mm

5| Damper design

.44	With actuating mechanism BEN, BEE, BE, InMax 50.75-S for 230V
.54	With actuating mechanism BEN, BEE, BE, InMax 50.75-S for 24V
.65*	With actuating mechanism BEN (BEE)-SR for 24V

** Design .65 is not available by using actuating mechanism BE, InMax 50.75-S*

6| Accessories

A	Design does not include protection box of the actuator and does not include protective cladding boards in line with the blade
A1	Design does not include protection box of the actuator and includes protective cladding boards in line with the blade
IB	Design includes protection box of the actuator and does not include the protective cladding boards in line with the blade
IB1	Design includes protection box of the actuator and include the protective cladding boards in line with the blade

7|Flange dimension

Q30	Flange width 30 mm

8| Material and other design options

ZN	Galvanized
A2	Stainless steel 1.4301 (AISI 304)
A4	Stainless steel 1.4404 (AISI 316L)

Circular damper MSD

1	2	3	4	5		6
MSD	EN	DN 500	.44	RS	-	ZN

EXAMPLE:

MSD EN DN 500 .44 RS-ZN

Circular smoke control damper MSD, dimension DN 500 mm, control design with actuating mechanism 230 V, straight connection to circular duct, galvanized material variant.

1| Type of smoke control damper - MSD

2| Country of destination

3| Damper dimensions ØD → see page 28

4| Damper design

.44	With actuating mechanism BEN 230V
.54	With actuating mechanism BEN 24V

5| Duct connection

RS	Straight connection to circular duct

6| Material and other design options

ZN	Galvanized
A2	Stainless steel 1.4301 (AISI 304)
A4	Stainless steel 1.4404 (AISI 316L)

Ordering key MSD-W

Rectangular damper MSD-W

1	2	3		4	5	6		7
MSD-W	EN	800x400	/	375	.44	Q30	-	ZN

EXAMPLE:
MSD-W EN 800x400/375 .44 Q30-ZN
Rectangular smoke control damper MSD-W, dimension 800x400 mm, built length 375 mm, control design with actuating mechanism 230 V, flange dimension 30 mm, galvanized material variant.

1| Type of smoke control damper - MSD-W

2| Country of destination

3| Damper dimensions A x B → see pages 18 to 27
"A" is the width of the damper
"B" is the height of the damper

4| Built length - 375 mm

5| Damper design

.44	With actuating mechanism BEN 230V
.54	With actuating mechanism BEN 24V
.4M0*	With actuating mechanism BFN 230, JOVENTA DAF2.20S with an electromagnet for 230V
.4M1*	With actuating mechanism BFN 230, JOVENTA DAF2.20S with an electromagnet for 24V
.5M0*	With actuating mechanism BFN 24, JOVENTA DAF1.20S with an electromagnet for 230V
.5M1*	With actuating mechanism BFN 24, JOVENTA DAF1.20S with an electromagnet for 24V

** For variants .4M0, .4M1, .5M0 and .5M1, an additional 1 kg must be added to account for the weight of the electromagnet*

6| Flange dimension

Q30	Flange width 30 mm

7| Material and other design options

ZN	Galvanized
A2	Stainless steel 1.4301 (AISI 304)
A4	Stainless steel 1.4404 (AISI 316L)

Circular damper MSD-W

1	2	3	4	5		6
MSD-W	EN	DN 400	.4M0	RS	-	ZN

EXAMPLE:
MSD-W EN DN 400 .4M0 RS-ZN
Circular smoke control damper MSD-W, dimension DN 400 mm, control design with actuating mechanism 230 V, straight connection to circular duct, galvanized material variant.

1| Type of smoke control damper - MSD-W

2| Country of destination

3| Damper dimensions ØD → see page 28

4| Damper design

.4M0*	With actuating mechanism BFN 230, JOVENTA DAF2.20S with an electromagnet for 230V
.4M1*	With actuating mechanism BFN 230, JOVENTA DAF2.20S with an electromagnet for 24V
.5M0*	With actuating mechanism BFN 24, JOVENTA DAF1.20S with an electromagnet for 230V
.5M1*	With actuating mechanism BFN 24, JOVENTA DAF1.20S with an electromagnet for 24V

** For variants .4M0, .4M1, .5M0 and .5M1, an additional 1 kg must be added to account for the weight of the electromagnet*

5| Duct connection

RS	Straight connection to circular duct

6| Material and other design options

ZN	Galvanized
A2	Stainless steel 1.4301 (AISI 304)
A4	Stainless steel 1.4404 (AISI 316L)

Data label

- Data label is placed on the damper casing (example)

The producer reserves the right for innovations of the product.
For actual product information see www.mandik.com

MANDÍK®

www.mandik.com

MANDÍK, a.s. • Dobříšská 550 • 267 24 Hostomice • Czech Republic • Tel.: +420 311 706 742 • E-Mail: mandik@mandik.cz